USER MANUAL

WINIX

AIR PURIFIER

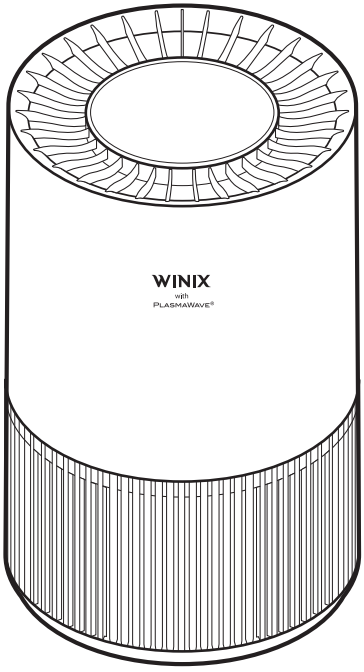

Model: WXAP300
WXAP310

EN AIR PURIFIER User Manual

SAFETY AND CAUTIONS

Before operating this equipment, carefully read and follow these safety cautions.

Ensure filters are inserted before running unit

Running the unit without filters may shorten the lifespan of the unit and cause electric shock or injury.

Be sure foreign objects are NOT inserted into the vents on the unit

Objects can include pins, rods, and coins.

Do not touch any part of the interior of the unit with wet hands

The high voltage may cause electric shock.

Ensure unit intake and outlet vents do not become blocked

Blockage may lead to increased internal temperatures causing product failure and deformation.

Do not use the unit as a step stool or place heavy objects on it

Personal injury may occur or product failure and deformation.

When turning the product upside down, install the filter with care in the direction so that the bottom (blocked) side of the filter is visible from the top

If the filter direction is not installed properly, it may cause product damage and user injury.

WARNING

Follow these instructions to reduce the risk of serious injury or death and to reduce risk of damaging the unit.

- If the supply cord is damaged, it must be replaced by a special cord or assembly available from the manufacturer or its service agent.
- This appliance can be used by children aged from 8 years and above and persons with reduced physical, sensory or mental capabilities or lack of experience and knowledge if they have been given supervision or instruction concerning use of the appliance in a safe way and understand the hazards involved.
- Children should be supervised to ensure that they do not play with the appliance.
- Cleaning and user maintenance shall not be made by children without supervision.
- Before cleaning or maintaining, ensure unit is unplugged.
- Do not pull on the power cord when unplugging the unit.
- Do not tie or knot the power cord when unit is in operation.
- If the unit becomes submerged in water, unplug it and contact customer service.
- Do not unplug or move the unit while in operation.
- Do not plug additional appliances into the same outlet or power supply.
- Do not touch the plug with wet hands.
- Unplug the unit when not in operation for extended periods of time.
- Do not place around heating elements.
- Do not use around mist or fumes from industrial oil or around large quantities of metallic dust.
- The cord can become damaged by forcefully bending, pulling, twisting, bundling, pinching or placing heavy objects on it.
- Do not install in any sort of motor or transport vehicle (trucks, boats, ships, etc).
- Do not place in an area with excessive amounts of noxious gases.
- Do not place near any flammable materials (aerosols, fuel, gases etc).
- Do not have the unit facing into wind or drafts.
- Do not place below any electrical outlet.
- Do not place in excessively humid areas where the unit may become wet.
- To reduce the risk of fire or electric shock, do not use this fan with any solid-state speed control device.
- Do not place unit closer than 30 cm from the wall during operation. It may cause condensation to the wall and the surrounding area.

SAFETY INSTRUCTIONS

Thank you for purchasing a Winix air purifier. This product is for household use only.

IMPORTANT CAUTIONS FOR USING YOUR AIR PURIFIER

WARNING : Follow the instructions in this manual to reduce the risk of electric shock, short circuit, and/or fire.

- Do not repair or modify the unit. All repairs should be completed by a qualified technician.
- Do not use if the power cord or plug is damaged or the connection to the wall outlet is loose.
- Use AC 220 - 240 V only.
- Do not damage, break, forcefully bend, pull, twist, bundle, coat, pinch, or place heavy objects on the power cord.
- Periodically remove dust from the power plug.
  This will reduce the risk of shock due to humidity build up.
- Remove the power plug from the outlet before cleaning the unit. When removing the power plug, grasp by holding the plug itself, never hold by the cord.
- If the power plug is damaged, it must be replaced by the manufacturer or a qualified technician.
- Remove the power plug from the outlet when not in use.
- Do not handle the power plug with wet hands.
- Do not operate the unit when using indoor smoke-generating insecticides.
- Do not clean unit with benzene or paint thinner.
- Do not spray insecticides on the unit.
- Do not use the unit where it is humid or where the unit may become wet, such as the bathroom.
- Do not insert fingers or foreign objects into air intake or outlet.
- Do not use the unit near flammable gases. Do not use near cigarettes, incense, or other spark-creating items.
- Unit will not remove carbon monoxide emitted from heating appliances or other sources.
- This appliance is not intended for use by children or other persons without assistance or supervision if their physical, sensory or mental capabilities prevent them from using it safely. Children should be supervised to ensure that they do not play with the appliance.

IMPORTANT PRECAUTIONS FOR USING YOUR AIR PURIFIER

- Do not block the intake or outlet vents.
- Do not use near hot objects, such as a stove.
- Do not use where the unit may come into contact with steam.
- Do not use the unit on its side.
- Keep away from products that generate oily residue, such as a deep fryer.
- Do not use detergent to clean the unit.
- Do not operate without a filter.
- Do not wash and reuse the True HEPA Filter.
- Hold the handle on the back of the unit to transport.
- Do not hold by the front panel.
- Do not stick any small objects in the air outlet vents or fan.

KNOWING YOUR AIR PURIFIER

Body

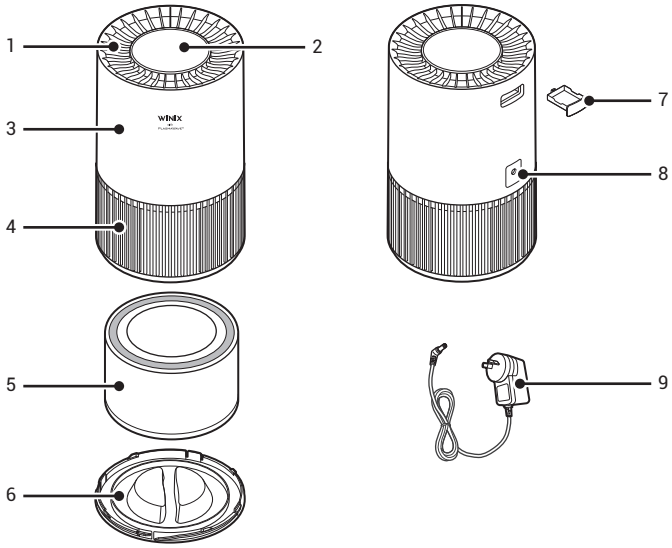

1. Air Outlet
2. Control Panel
3. Main Body
4. Air Inlet
5. Filter
6. Base
7. Aroma Tray
8. DC Charging Port
9. Adapter

Air Cleaning System

1. **Pre-Filter**: Captures initial large particles and dust.
2. **H13 HEPA Filter**: Captures dust, smoke, pollen, and other allergens.
3. **Carbon Filter**: Eliminates odors and bad smells.

OPERATING YOUR AIR PURIFIER

Setting Up

1. **Preparation**: When using your air purifier for the first time, lift your air purifier from the box and remove all packing materials.
2. **Surface Requirements**: Always place the purifier on a firm, level and flat location.
3. **Power Connection**: Plug the power cord into a right voltage outlet.

Note

1. For proper air flow, allow at least 15 inches / 38 cm of clearance on all sides of the unit.
2. Keep away from anything that would block airflow.

Touch Panel

Icon	Description
	Power Short press to turn on/off the unit.
	Fan Speed Short press to cycle through Speed Ⅰ, Speed Ⅱ and Speed Ⅲ.
P	**Ion** Short press to turn on/off the Ion feature.
3Sec/	**Mood Light & Child Lock** Short press to turn on/off the mood light. Long press to turn on/off the Child Lock.
	Timer Short press to set an automatic shut-off timer: 2H → 4H → 8H.
	Sleep Mode Short press to enter (indicator flashes for 5s) or exit Sleep Mode.
	Filter Replacement • When the filter expires: The indicator stays solid red. Long press the button for 3-5 seconds to reset. • When the filter is not expired: Long press the button. The red indicator will blink 20 times (once per second) and then stop. To reset, long press again within this blinking period.

CLEANING & MAINTENANCE

Proper cleaning of your air purifier is essential to maintain optimal performance.

General Cleaning

1. Turn off and unplug the unit before cleaning.
2. Wipe the outside of the air purifier with a clean, soft and dry cloth.
3. Clean the air inlet and air outlet with a soft dry cloth or brush.

Note

1. Never clean with abrasive chemicals or flammable cleaning agents.
2. It is recommended to clean the unit at least once a month.
3. Do not put the air purifier in water or spray water directly on it.
4. Do not stick any foreign objects or your fingers inside the unit.
5. Do not use gasoline, benzene, thinner, harsh cleaners, etc. on and/or in the unit while cleaning as they will damage the products. Never use alcohol or other solvents.

Filter Indicator Check

Depending on usage and your air quality conditions, the filter will last approximately 12 months. The filter replacement indicator will illuminate red when it is time to replace the filter.

Filter Replacement

The filter should be replaced every 12 months. You may need to replace your filter earlier or later depending on how often you use your air purifier. Follow the instructions below to change the filter.

Note

Remember to tear off the packing bag of the new filter before replacing it.

1. Turn off and unplug the air purifier.
2. Rotate and lift the base cover.
3. Remove the old filter and replace it with a new one. Ensure that it is securely fitted in place, then reattach the base cover.

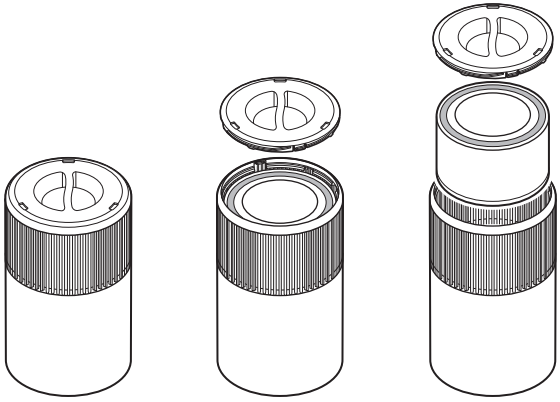

CLEANING & MAINTENANCE

Filter Indicator Reset

1. After replacing filter, turn on the air purifier.
2. Press and hold the button on the control panel to reset it.
3. The filter replacement indicator will turn off when successfully reset.

Storage

When preparing to store your air purifier after extended periods of non-use, follow these instructions to ensure the longevity of the unit:

1. Cleaning is recommended before storage.
2. Pack both the air purifier and the filter in plastic packing and store in a cool, dry place, away from direct sunlight and extreme temperatures.

USING THE AROMA TRAY

This air purifier features a built-in aroma tray, allowing you to diffuse your favorite essential oils.

1. Locate the aroma tray on the back of the unit and remove it.
2. Apply 3-5 drops of essential oil to the included pad. For a stronger scent, you may add a few more drops.
3. Reinsert the aroma tray. Make sure it click into place.

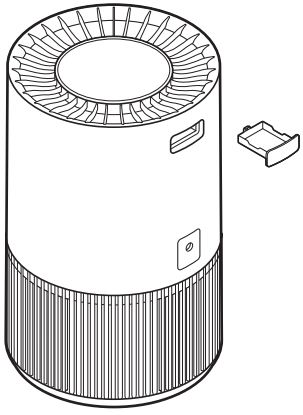

TROUBLESHOOTING

PROBLEM	POSSIBLE CAUSE	SOLUTION
Unable to Power On	Power Connection	Ensure the power plug is securely connected. Unplug and then reconnect the unit.
	Outlet Condition	Check if the power outlet works.
Reduced Airflow	Insufficient Clearance	Maintain at least 15 inches / 38 cm of clearance on all sides of the air purifier.
	Dirty Filter	Filter isn't clean. Clean or replace with a new one if necessary.
Loud Noise	Level Placement	Ensure the unit is on a flat, stable surface.
	Improperly Positioned Filter	Make sure the filter is removed from its packaging and properly in place.
	Dirty Filter	Filter isn't clean. Replace with a new one if necessary.
	Damaged Filter	Check the filter for damage. If damaged, replace with a new one.
Unpleasant Odors	Dirty Filter	Clean the filter or replace it if necessary.
Filter Indicator Illuminated Red	Filter replacement needed	Replace the air filter, then press and hold the reset button to reset.

UNIT SPECIFICATIONS

Model Name	WXAP300, WXAP310
Power Voltage	AC 220 - 240 V, 50 / 60 Hz
Power Rate	11 W
Verified Room Size	29 m^2
Dimensions	173 mm (W) x 173 mm (D) x 280 mm (H)
Weight	1.35 kg

※ The exterior, design, and product specifications may be changed without prior notice to improve product performance.

MEMO

MEMO

MEMO

WINIX

WINIX REPLACEMENT FILTER CLUB

For exclusive savings on replacement filters

AUSTRALIA NEW ZEALAND

Contact for product related inquiries and customer service

To expedite service, please specify the model name and number, the nature of the problem, your contact information, and your address.

Distributed by the CDB Group

After sales and warranty enquiries, visit website
Website : www.ausclimate.com.au / www.ausclimate.co.nz