LG
Life's Good

ENGLISH

OWNER'S MANUAL

MINI HI-FI SYSTEM

Please read this manual carefully before operating your set and retain it for future reference.

FOR THE GUARANTEE TERMS & CONDITIONS, PLEASE REFER TO INNER PAGE OF BACK COVER.

CM9740(CM9740, CMS9740F)

MFL67989420

www.lg.com

Safety Information

CAUTION: TO REDUCE THE RISK OF ELECTRIC SHOCK DO NOT REMOVE COVER (OR BACK) NO USER-SERVICEABLE PARTS INSIDE REFER SERVICING TO QUALIFIED SERVICE PERSONNEL.

This lightning flash with arrowhead symbol within an equilateral triangle is intended to alert the user to the presence of uninsulated dangerous voltage within the product's enclosure that may be of sufficient magnitude to constitute a risk of electric shock to persons.

The exclamation point within an equilateral triangle is intended to alert the user to the presence of important operating and maintenance (servicing) instructions in the literature accompanying the product.

WARNING: TO PREVENT FIRE OR ELECTRIC SHOCK HAZARD, DO NOT EXPOSE THIS PRODUCT TO RAIN OR MOISTURE.

WARNING: Do not install this equipment in a confined space such as a book case or similar unit.

CAUTION: The apparatus should not be exposed to water (dripping or splashing) and no objects filled with liquids, such as vases, should be placed on the apparatus.

CAUTION: This product employs a Laser System. To ensure proper use of this product, please read this owner's manual carefully and retain it for future reference. Shall the unit require maintenance, contact an authorized service center.
Use of controls, adjustments or the performance of procedures other than those specified herein may result in hazardous radiation exposure.
To prevent direct exposure to laser beam, do not try to open the enclosure.

CAUTION: Do not block any ventilation openings. Install in accordance with the manufacturer's instructions.
Slots and openings in the cabinet are provided for ventilation and to ensure reliable operation of the product and to protect it from over heating. The openings shall be never be blocked by placing the product on a bed, sofa, rug or other similar surface. This product should not be placed in a built-in installation such as a bookcase or rack unless proper ventilation is provided or the manufacturer's instruction has been adhered to

CAUTION concerning the Power Cord

Most appliances recommend they be placed upon a dedicated circuit;

That is, a single outlet circuit which powers only that appliance and has no additional outlets or branch circuits. Check the specification page of this owner's manual to be certain. Do not overload wall outlets. Overloaded wall outlets, loose or damaged wall outlets, extension cords, frayed power cords, or damaged or cracked wire insulation are dangerous. Any of these conditions could result in electric shock or fire. Periodically examine the cord of your appliance, and if its appearance indicates damage or deterioration, unplug it, discontinue use of the appliance, and have the cord replaced with an exact replacement part by an authorized service center. Protect the power cord from physical or mechanical abuse, such as being twisted, kinked, pinched, closed in a door, or walked upon. Pay particular attention to plugs, wall outlets, and the point where the cord exits the appliance. To disconnect power from the mains, pull out the mains cord plug. When installing the product, ensure that the plug is easily accessible.

This device is equipped with a portable battery or accumulator.

Safety way to remove the battery or the battery from the equipment: Remove the old battery or battery pack, follow the steps in reverse order than the assembly. To prevent contamination of the environment and bring on possible threat to human and animal health, the old battery or the battery put it in the appropriate container at designated collection points.
Do not dispose of batteries or battery together with other waste. It is recommended that you use local, free reimbursement systems batteries and accumulators. The battery shall not be exposed to excessive heat such as sunshine, fire or the like.

Grounding

(Except for devices which are not grounded.) Ensure that you connect the earth ground wire to prevent possible electric shock (i.e. a Audio with a three-prong grounded AC plug must be connected to a three-prong grounded AC outlet). If grounding methods are not possible, have a qualified electrician install a separate circuit breaker. Do not try to ground the unit by connecting it to telephone wires, lightening rods, or gas pipes.

For Wireless product European Union Notice

CE 0197

LG Electronics hereby declares that this/these product(s) is/are in compliance with the essential requirements and other relevant provisions of Directive 1999/5/EC, 2004/108/EC, 2006/95/EC, 2009/125/EC and 2011/65/EU.

Please contact to the following address for obtaining a copy of the DoC (Declaration of Conformity).

Contact office for compliance of this product:

LG Electronics Inc.
EU Representative, Krijgsman 1,
1186 DM Amstelveen, The Netherlands

- Please note that this is NOT a Customer Service contact point. For Customer Service Information, see Warranty Card or contact the dealer that you purchased this product.

In door use only.

RF Radiation Exposure Statement

This equipment should be installed and operated with minimum distance 20cm between the radiator and your body.

POWER: This unit operates on a mains supply of 200-240V~, 50/60Hz.

Wiring: This unit is supplied with a BS 1363 approved main plug. When replacing the fuse, always use of the same rating approved to BS 1362. Never use this plug with the fuse cover omitted. To obtain a replacement fuse cover contact your dealer. If the type of plug supplied is not suitable for the mains sockets in your home, then the plug should be removed and a suitable type fitted. Please refer to the wiring instructions below:

Warning: A mains plug removed from the mains lead of this unit must be destroyed. A mains plug with bared wires is hazardous if inserted in a mains socket. Do not connect either wire to the earth pin, marked with the letter E or with the earth symbol or coloured green or green and yellow. If any other plug is fitted, use same rating of fuse in the plug.

Important: The wires in this mains lead are coloured in accordance with the following codes:

- BLUE: NEUTRAL, BROWN: LIVE - As the colours of the wires in the mains lead of this unit may not correspond with the coloured marking identifying the terminals in your plug, proceed as follows: The wire which is coloured blue must be connected to the terminal which is marked with the letter N or coloured black. The wire which is coloured brown must be connected to the terminal which is marked with the letter L or coloured red.

Disposal of your old appliance

1. When this crossed-out wheeled bin symbol is attached to a product it means the product is covered by the European Directive 2002/96/EC.
2. All electrical and electronic products should be disposed of separately from the municipal waste stream via designated collection facilities appointed by the government or the local authorities.
3. The correct disposal of your old appliance will help prevent potential negative consequences for the environment and human health.
4. For more detailed information about disposal of your old appliance, please contact your city office, waste disposal service or the shop where you purchased the product.

Disposal of waste batteries/accumulators

1. When this crossed-out wheeled bin symbol is attached to batteries/accumulators of Your product it means they are covered by European Directive 2006/66/EC.
2. This symbol may be combined with chemical symbols for mercury(Hg), cadmium(Cd) or lead(Pb) if the battery Contains more that 0.0005% of mercury,0.002% of cadmium or 0.004% of lead.
3. All batteries/accumulators should be disposed separately from the municipal waste stream via designated collection facilities appointed by the government or the local authorities.
4. The correct disposal of Your old batteries/accumulators will help to prevent potential negative consequences for the environment, animal and human health.
5. For more detailed information about disposal of Your old batteries/accumulators, please contact Your city office, waste disposal service or the shop where You purchased the product.

Table of Contents

1 Getting Started

2 Safety Information
8 Unique Features
8 Accessories
9 Playable file Requirement
9 – MP3/WMA music file requirement
9 – Compatible USB Devices
9 – USB device requirement
10 Remote control
12 Front panel
14 Rear panel
15 How to Affix the Ferrite Core(For EMI only)
15 – Affix the Ferrite Core for lighting cable

2 Connecting

16 Connecting to speakers
16 – Before connecting
16 – Arrange the main unit and the speakers
17 – Connecting to speakers
17 – Attaching the high channel speakers to the unit
17 – Attaching the low channel speakers to the unit
18 – Attaching the speaker light cables to the unit
19 Optional Equipment Connection
19 – AUX IN Connection
19 – PORT. IN Connection
19 – Listening to music from your portable player or external device
20 – USB Connection
20 – Antenna Connection

3 Operating

21 Basic Operations
21 – CD/USB Operations
21 – Selecting a folder and an MP3/WMA file
22 – Deleting an MP3/WMA file
23 Playback effect
23 – SMART DJ playback
24 – DJ EFFECT
25 – DJ Pro.
25 – AUTO DJ playback
26 – JUKE BOX Playback (Program play)
27 Using a Bluetooth wireless technology
27 – Listening to music stored on the Bluetooth devices
28 – Using Bluetooth App
29 – NFC
30 – Activate Bluetooth with "LG Bluetooth Remote" App
30 Radio Operations
30 – Listening to the radio
30 – Improving poor FM reception
31 – Presetting the Radio Stations
31 – Deleting all the saved stations
31 – Seeing information about a Radio station
32 Other Operations
32 – Turn off the sound temporarily
32 – Displaying file information (ID3 TAG)
32 – DEMO
32 – Using Microphone
32 – Switching on and off the speaker lighting
33 – Using X-FLASH
34 Sound adjustment
34 – Setting the surround mode
34 – Setting the USER EQ
35 Setting the Clock
35 – Setting the Clock through "LG Bluetooth Remote" App
35 – Using your player as an alarm clock
36 – Sleep Timer Setting
36 – Dimmer
36 – Auto power down
36 Advanced Operations
36 – Recording to USB

4 Troubleshooting

38 Troubleshooting
38 – General

5 Appendix

39 Trademarks and Licenses
40 General specifications
41 Speakers specifications
42 Maintenance
42 – Notes on Discs
42 – Handling the Unit

6 Warranty

43 Warranty

Unique Features

Bluetooth®

Listens to music stored on your bluetooth device.

Portable In

Listens to music from your portable device. (MP3, Notebook, etc)

Playback effects

Listens to music with various sound and playback effects.

USB Direct Recording

Records music to your USB device.

LG Bluetooth Remote

LG Bluetooth Remote is an App designed to let you take control of some of LG's latest Audio devices. Refer to the page 28-30.

Accessories

Please check and identify the supplied accessories.

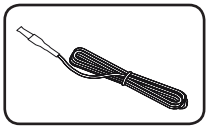

FM Antenna (1)

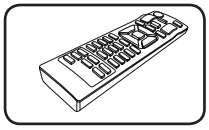

Remote Control (1)

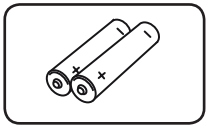

Batteries (2)

Playable file Requirement

MP3/WMA music file requirement

MP3/WMA file compatibility with this unit is limited as follows.

- Sampling frequency : within 32 to 48 kHz (MP3), within 32 to 48 kHz (WMA)
- Bit rate : within 32 to 320 kbps (MP3), 40 to 192 kbps (WMA)
- Maximum files : Under 999
- Maximum folders : Under 99
- File extensions : ".mp3"/ ".wma"
- CD-ROM file format : ISO 9660/ JOLIET
- We recommend that you use Easy-CD Creator, which creates an ISO 9660 file system.

You have to set the disc format option to [Mastered] in order to make the discs compatible with the LG players when formatting rewritable discs. When setting the option to Live File System, you cannot use it on LG players.

(Mastered/Live File System : Disc format system for Windows Vista)

Compatible USB Devices

- MP3 Player : Flash type MP3 player.
- USB Flash Drive :
  Devices that support USB2.0 or USB1.1.
- The USB function of this unit does not support all USB devices.

USB device requirement

- Devices which require additional program installation when you have connected it to a computer, are not supported.
- Do not extract the USB device while in operation.
- For a large capacity USB, it may take longer than a few minute to be searched.
- To prevent data loss, back up all data.
- If you use a USB extension cable or USB hub, the USB device is not recognized.
- Using NTFS file system is not supported. (Only FAT(16/ 32) file system is supported.)
- This unit is not supported when the total number of files is 1 000 or more.
- External HDD, Card readers, Locked devices, or hard type USB devices are not supported.
- USB port of the unit cannot be connected to PC. The unit cannot be used as a storage device.
- Some USB may not work with this unit.

Remote control

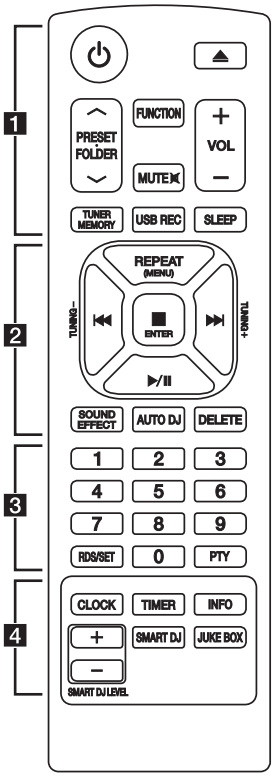

1

(Power) **:** Switches the unit ON or OFF.

(Open/Close) **:** Opens and closes the disc tray.

PRESET·FOLDER ∧/∨ :

- Searches for a folder of MP3/WMA files. When a CD/USB containing MP3/WMA files in several folders is being played, press **PRESET·FOLDER ∧/∨** to select the folder you want to play.
- Chooses a preset number for a radio station.

FUNCTION : Selects the function and input source.

MUTE : Mutes the sound.

VOL +/- : Adjusts speaker volume.

TUNER MEMORY :

- Stores radio stations.
- Deletes all the saved stations.

USB REC : USB direct recording.

SLEEP : Sets the system to turn off automatically at a specified time.
(Dimmer : The display window will be darkened by half.)

Battery Installation

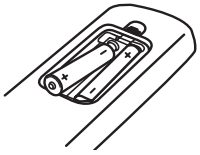

Remove the battery cover on the rear of the Remote Control, and insert two (size AAA) batteries with ⊕ and ⊖ matched correctly.

2

REPEAT (MENU) : Listens to your tracks/files repeatedly or randomly.

TUNING-/+ : Selects the radio stations.

⏮/⏭ (Skip/Search) **:**

- Skips Fast backward or Forward.
- Searches for a section within a track/file.

■ ENTER :

- Stops playback or recording.
- Cancels DELETE function.

►/II (Play/Pause) **:**

- Starts or pauses playback.
- Selects STEREO/MONO.

SOUND EFFECT : Chooses sound impressions.

AUTO DJ : Selects the AUTO DJ mode. (For more information refer to the page 25)

DELETE :

- Deletes MP3/WMA files.
- Deletes a song on JUKE BOX list.

3

0 to **9** numerical buttons **:** Selects numbered tracks, files, or preset number.

RDS/SET :

RDS (Radio Data System) (Refer to the page 31.)

Confirms the setting.

PTY : Searches radio stations by radio type.

4

CLOCK : For setting the clock and checking the time.

TIMER : With the TIMER function you can turn CD, USB play and TUNER reception on or off at a desired time.

INFO : Sees informations about your music. An MP3 file often come with ID3 tag. The tag gives the Title, Artist, Album or Time information.

SMART DJ : Selects SMART DJ mode. (For more information refer to the page 23)

JUKE BOX :

- Selects JUKE BOX mode.
- Makes your favorites list.

SMART DJ LEVEL +/- : Adjusts SMART DJ effect sound level.

Front panel

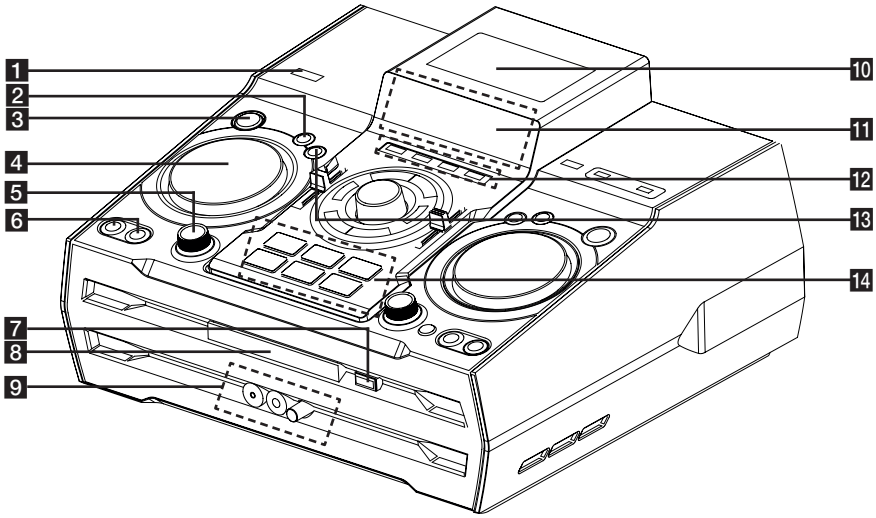

1 ⏻/❙(Power)

2 DJ EFFECT

Selects DJ effect. (For more informaion refer to the page 24).

3 SMART DJ

Selects SMART DJ mode. (For more information refer to the page 23)

4 DJ EFFECT CONTROL

Makes a sound on DJ effect mode.

5 SMART DJ LEVEL

Adjusts the Smart DJ Level.

6 AUTO DJ

Selects the AUTO DJ mode. (For more informaion refer to the page 25).

JUKE BOX

- Makes your favorites list.

- Switches on and off JUKE BOX.

7 ⏏ (Open/Close)

8 Disc tray

9 PORT. IN jack

MIC jack

MIC VOL.

10 NFC

NFC allows you to install and open "LG Bluetooth Remote" app to NFC-enabled phone.

11 Display.

12 CD

Selects the CD function.

USB

Selects the USB function.

AUX / BLUETOOTH / MIC. / PORT. IN

Selects BLUETOOTH, AUX and MIC, PORT. IN function.

TUNER

Selects the TUNER function.

13 DJ Pro.

Selects CLUB or FOOTBALL Sound function to mix. (For more informaion refer to the page 25).

14 DJ Pro.

- **DJ Pro.** Key to select the 6 kinds of sound.

- DJ Pro mode on the CLUB, the Key mapping the CLUB sound effect playback.

- DJ Pro mode on the FOOTBALL, the Key mapping the FOOTBALL sound effect playback.

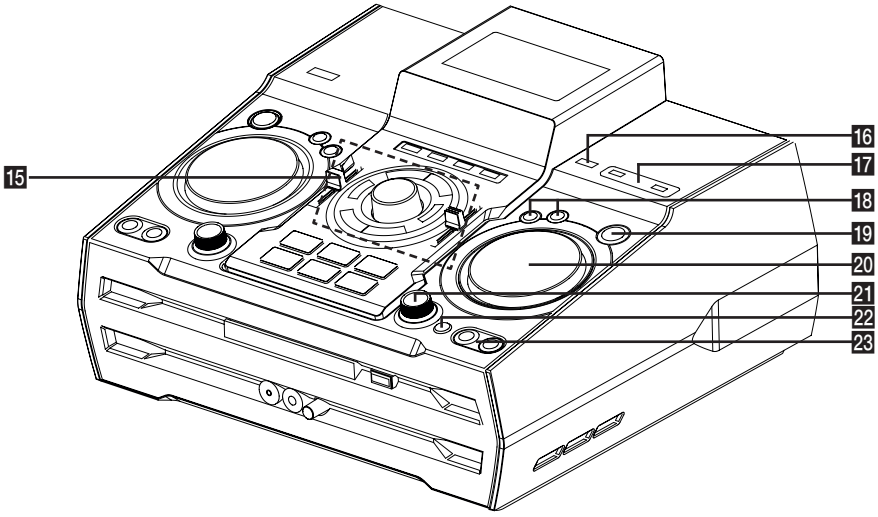

15 >II

- Starts or pauses playback.
- Selects Stereo/Mono.

□

Stops playback or cancels DELETE function.

I<< / >>I

- Skips Fast backward or Forward.
- Searches for a section within a track/file.

MASTER VOLUME

Adjusts speaker volume.

BASS / TREBLE

Adjusts the sound level when setting USER EQ.

SPK LIGHTING / DEMO

- Turn on/off the lighting effects.
- Shows demo.

(SPK LIGHTING : The red LED lights up of the inside of Sub Woofer Speaker.)

USER EQ

Controls sound register.

16 R USB REC

Records to USB.

17 USB 1/2 Port

You can play or record sound files by connecting the USB device.

18 LG EQ

Chooses sound impressions.

BASS BLAST

Selects the BASS BLAST or BYPASS sound directly.

19 ENTER

Selects a folder when searching a file.

20 MULTI JOG / FILE SEARCH

- Sets the clock time.
- Selects a folder and a file on CD/USB function.

21 X-FLASH LEVEL

- Selects a **X-FLASH** mode.

22 X-FLASH ON / OFF

- Selects a X-FLASH ON / OFF mode.

(X-FLASH : The white LED lights up of the front of Sub Woofer Speaker.)

23 FOLDER

Moves to folder and file in selection mode.

DELETE

-Deletes a song on JUKE BOX list.
-Deletes MP3/WMA files. (USB only)

Rear panel

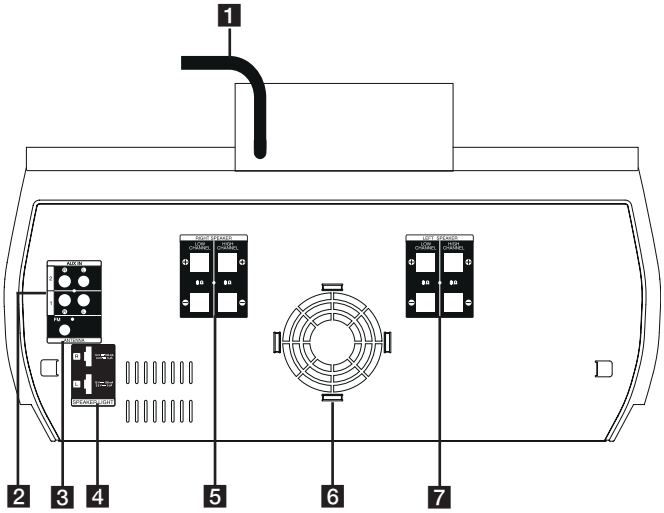

1 Power cord

Caution

- Connect the power cord to wall outlet directly if possible. Or when you use an extension cable, it is highly recommended to use an extension cable of 110 V / 15 A or 230 V / 15 A, otherwise the unit may not operate properly because of the lack of power supply.
- Do not overload the extension cord with excessive electrical load.

2 **AUX IN 1/2** connectors (L/R)

3 **ANTENNA (FM)**

4 **SPEAKER LIGHT**

5 **RIGHT SPEAKER**

LOW CHANNEL ⊕ / ⊖
Connects banana plugs.

HIGH CHANNEL ⊕ / ⊖
Connects speaker's cables.

6 Cooling fan

7 **LEFT SPEAKER**

LOW CHANNEL ⊕ / ⊖
Connects banana plugs.

HIGH CHANNEL ⊕ / ⊖
Connects speaker's cables.

How to Affix the Ferrite Core(For EMI only)

Affix the Ferrite Core for lighting cable

Before connecting speaker's lighting cable, you should affix ferrite core in order to reduce or eliminate electrical interference.

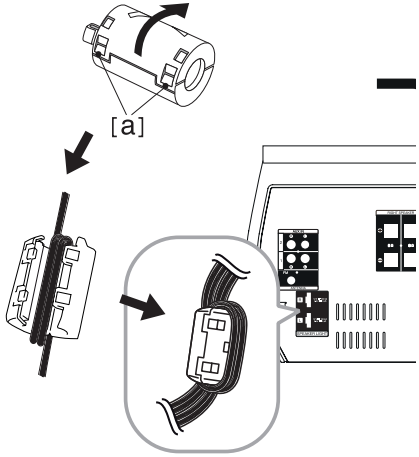

1. Pull the stopper [a] of the ferrite core to open.
2. Wind the speaker lighing cables around the ferrite core twice.
3. Close the ferrite core until it clicks.

Connecting to speakers

Before connecting

1. You install SPK on a flat surface.

(It is recommended that at least two people to carry by left and right handle (A) and (B)).

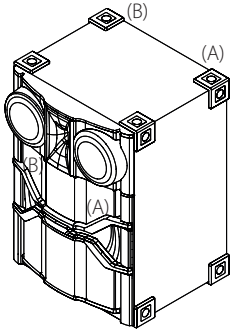

Caution

- Install the speakers on a firm surface not to slide.
- If the speakers DON'T install on firm surface, the vibration caused by the strong output can shake and move the speakers and make noise.

Arrange the main unit and the speakers

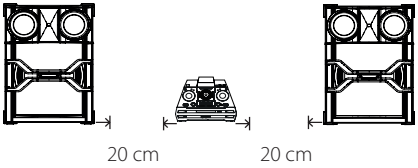

- The speakers must be placed at a distance of about 20 cm from the unit for preventing the vibration caused by the speakers.

Connecting to speakers

Connect the black stripe of each wire to the terminals marked - (minus) and the other end to the terminals marked + (plus).

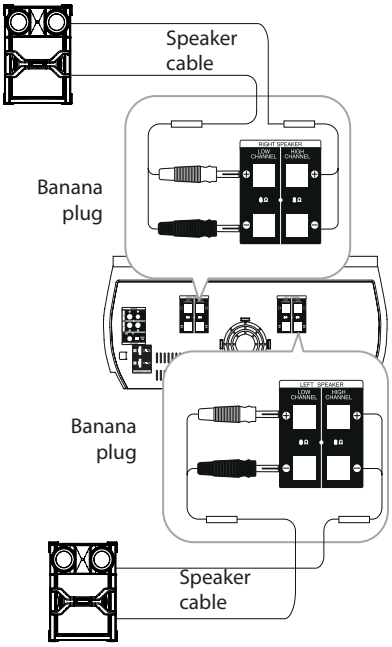

Attaching the high channel speakers to the unit

1. Loosen the knob by turning it counterclockwise.
2. Insert the bare part of the wire into the hole in side of each terminal.
3. Tighten the knob by turning it clockwise to secure the wire.

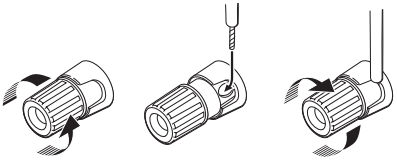

Cable	HIGH CHANNEL
Black stripe	Connect to ⊖
Transparent	Connect to ⊕

Attaching the low channel speakers to the unit

1. Remove a protective cab.
2. Insert the banana plug into the corresponding terminal.

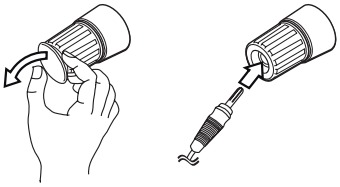

Banana plug	LOW CHANNEL
Black	Connect to ⊖
Red	Connect to ⊕

Attaching the speaker light cables to the unit

To connect the speaker light cable to the unit, insert the cable to **SPEAKER LIGHT** connectors on the unit.

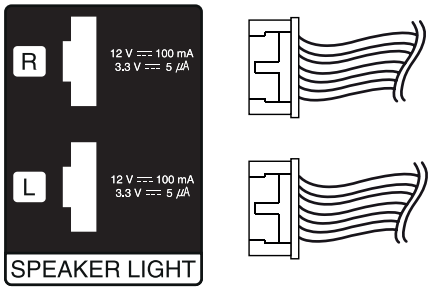

Caution

- Make sure that the jacks and the speakers are matched correctly.
- Make sure to connect the cables to connectors tightly on the unit.

Caution

- Do not try to lift the speaker alone. It needs two persons to lift the speaker. Otherwise it may result in the speaker malfunction and cause personal injury and/or property damage.
- When you connect the speakers to the unit, make sure to connect the speaker's cable and plug to the corresponding speaker terminal.
- Check the volume level before playing music to prevent infirm, child, and pregnant women from being shocked by the sudden and loud sound from the unit.
- Do not use the unit in a limited space. It may damage a person's hearing. It is recommended to use it in a wide space.
- Be careful to make sure children not to put their hands or any objects into the opening speaker LED cover.
- The speakers contain magnet parts, so color irregularity may occur on the TV screen or PC monitor screen. Please use the speakers far away from either TV screen or PC monitor.
- Make sure to install the speaker with other people in order to prevent it from falling and causing injuries to the installer.
- Be carefully look at speaker lights at a long time. It may cause damage to eyesight.

Optional Equipment Connection

AUX IN Connection

Connect an output of auxiliary device(Camcoder, TV, Player, etc) to the **AUX IN 1/2** (L/R) connector.

If your device has only one output for audio(mono), connect it to the left (white) audio jack on the unit.

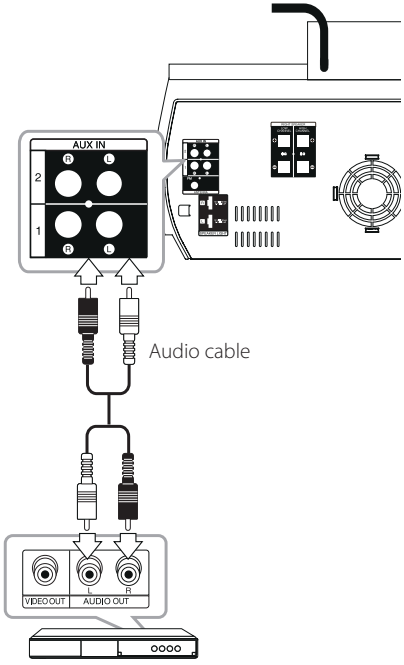

PORT. IN Connection

Connect an output (earphone or line out) of portable device (MP3 or PMP etc) to the **PORT. IN** connector.

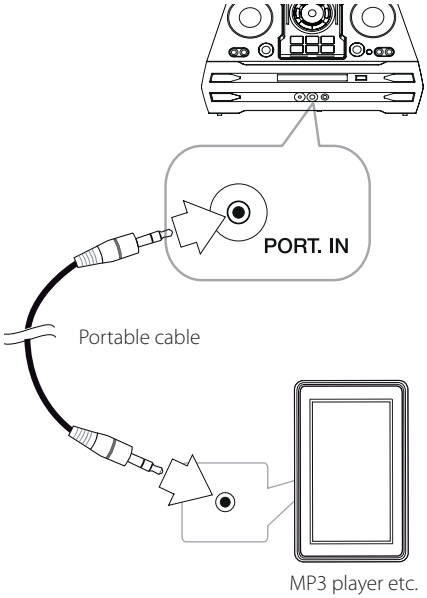

Listening to music from your portable player or external device

The unit can be used to play the music from many types of portable player or external device.

1. Connect the portable player to the PORT. IN connector of the unit.

   Or

   Connect the external device to the AUX IN connector of the unit.
2. Turn the power on by pressing ⏻/❙.
3. Select the PORTABLE or AUX function by pressing **FUNCTION** on the remote control or **AUX / BLUETOOTH / MIC. / PORT. IN** on the unit.
4. Turn on the portable player or external device and start it playing.

USB Connection

Connect a USB device (or MP3 player, etc.) to the USB ports on the unit.

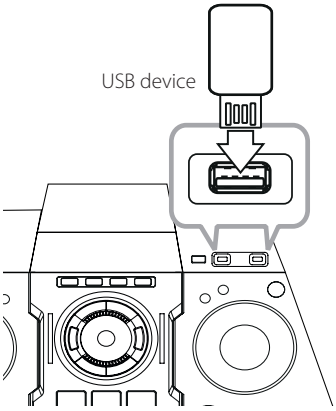

Note

Removing the USB device from the unit :

1. Choose a different function/mode or press ■ **ENTER** on the remote control or ☐ on the unit twice in a row.
2. Remove the USB device from the unit.

Antenna Connection

Connect the supplied FM antenna for listening to the radio.

Connect the FM wire antenna to the FM antenna connector.

Be sure to fully extend the FM wire antenna.

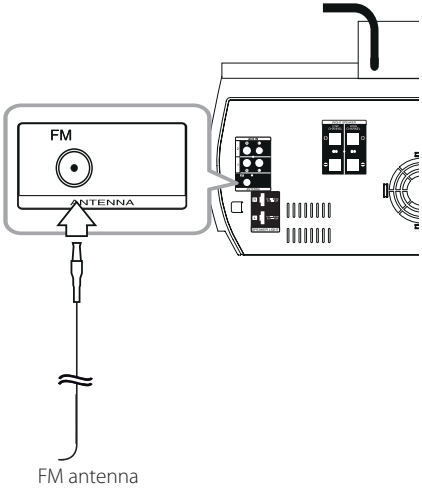

Basic Operations

CD/USB Operations

1. Insert the disc by pressing ⏏ or connect the USB device to the USB port.
2. Select the CD or USB function by pressing **CD** or **USB** on the unit or **FUNCTION** on the remote control.

To	Do this
Stop	Press ■ **ENTER** on the remote control or ☐ on the unit.
Playback	Press **►/II** on the remote control or **>II** on the unit.
Pause	Press **►/II** on the remote control or **>II** on the unit during playback.
Searching for a section within a track/file	Press **I◄◄/►►I** on the remote control or **I<<</>>I** on the unit during playback and release it at the point you want to listen to.
Selecting a track/file directly	Press **0** to **9** numerical buttons on the remote control to go to the desired file or track directly.
Skipping to the next/previous track/file	During playback, (1) By using **I◄◄/►►I** buttons : Press **I◄◄/►►I** to go to the next track/file or to return to the beginning of the current track/file. Press **I◄◄** twice briefly to step back to the previous track/file. (2) By using **FILE SEARCH** knob : Rotate **FILE SEARCH** on the unit and press **►/II** to play the track/file.
Playing repeatedly or randomly	Press **REPEAT(MENU)** on the remote control repeatedly. Refer to the note for details about the display change.

Note

- The display changes in the following order.

USB	MP3/WMA CD	Audio CD
REPEAT TRK	REPEAT TRK	REPEAT TRK
REPEAT *DIR	REPEAT DIR	-
REPEAT ALL	REPEAT ALL	REPEAT ALL
RANDOM	RANDOM	RANDOM
OFF	OFF	OFF

*DIR : Directory

- When you play JUKE BOX list, only REPEAT TRK and REPEAT ALL are available.
- Even after restarting the unit or switching one function to another, you can listen to music from the point where it's last been played.
- The next file name is displayed every 30 seconds. (Except RANDOM play, AUTO DJ RANDOM play, the last file of playlist, etc.)
- If you leave the disc tray open for 5 minutes, it will close automatically.
- The DTS is not supported. In case of DTS audio format, audio is not output.

Selecting a folder and an MP3/WMA file

On the unit

1. Press **FOLDER** and rotate **FILE SEARCH** until a desired folder appears.
2. Press **ENTER** and rotate **FILE SEARCH** until a desired file appears. Press **>II** to play it.

On the remote control

1. Press **PRESET·FOLDER** ∧/∨ repeatedly until a desired folder appears.
2. Press **►/II** to play it. The first file of folder will play.

Note

- CD / USB Folders/Files are recognized as below.

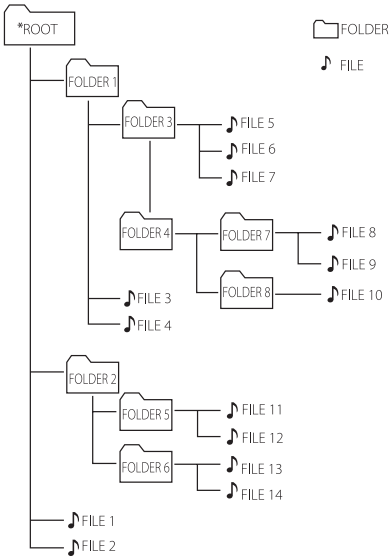

- If there is no file in a folder, the folder will not appear.
- Folders will be presented as the following order;
  ROOT → FOLDER 1 → FOLDER 3 → FOLDER 7 → FOLDER 8 → FOLDER 5 → FOLDER 6
- File will be played from ♪ file No.1 to ♪ file No.14 one by one.
- Files and folders will be presented in order recorded and may be presented differently according to the record circumstances.
- *ROOT : The first screen you can see when a computer recognize the CD/USB is "ROOT".

Deleting an MP3/WMA file

You can delete file, folder or format by pressing **DELETE**. This function is supported only in stop status. (USB only)

1. -Select the file you want to delete and press **DELETE**.
   -Select the folder you want to delete by pressing **FOLDER** and rotating **FILE SEARCH** and press **DELETE**.
   -Press and hold **DELETE** to format the USB device.

   Or

   Press **DELETE** repeatedly during selecting the MP3/WMA file.

   The display changes in the following order.

   - DEL FILE? : Deletes file
   - DEL FOLDER? : Deletes folder
   - FORMAT? : Formats USB
2. To delete file/folder or format, press ▶/II on the remote control or press >II on the unit.
3. If you want to exit the current mode, press ■ **ENTER** on the remote control or press □ on the unit.

Caution

- Do not extract the USB device during operation. (play, delete, etc.)
- Regular back up is recommended to prevent data loss.
- The delete function may not be supported according to the USB status. (lock, etc.)

Playback effect

The unit supports various sound and playback effects : SMART DJ, AUTO DJ, DJ EFFECT, and JUKE BOX playback.

SMART DJ playback

SMART DJ plays music with various sound and playback effects : auto effect, cross fade, back spin, loop, beat box, and voice sampling.

It plays repeatedly all the music in the USB device and gives various effects randomly.

You can enjoy it with 3 types of genre : ELECTRO, HOUSE and REGUETON. Press **SMART DJ** repeatedly. The display window changes each time you press **SMART DJ** as followings : SMART DJ OFF -> SMART DJ ELECTRO -> SMART DJ HOUSE -> SMART DJ REGUETON.

To cancel it, press **SMART DJ** repeatedly until "SMART DJ OFF" appears on the display window. You can listen to music as usual.

Adjusting the effect level

You can adjust SMART DJ effect sound level between LOW, MIDDLE, and HIGH. As the effect level moves from LOW to HIGH, SMART DJ effect appears more frequently and makes the sound feel more powerful.

On SMART DJ mode, rotate **SMART DJ LEVEL** repeatedly on the unit or **SMART DJ LEVEL +/-** on the remote control. The display window changes as followings : MIDDLE -> HIGH -> LOW.

Note

- Find sound and playback effects below.

Effect	Description
Auto effect	Auto effect blends various sound effects to fit the mood automatically. It includes flanger, phaser, delay, and chorus.
Cross fade	It playbacks to seamlessly fade from one song into the beginning of another.
Back spin	It playbacks a section of music fast in reverse.
Loop	It repeats a section of music.
Beat box	It inserts a beat box during playback.
Voice sampling	It inserts a sound during playback.

- SMART DJ is supported on USB or CD function.
- You can identify the effect by hearing the sound, not by display window.
- It is recommended to play only the certain genres (ELECTRO, HOUSE, REGUETON) on SMART DJ mode. SMART DJ is optimized to enjoy that music.
- If the function changes to the others or turn off and on the unit on SMART DJ mode, SMART DJ will be turned off.
- If you record your music you are listening to on SMART DJ mode, SMART DJ will be turned off.
- If SMART DJ is turned off, you should turn it on again to enjoy the effect.
- It is impossible to operate SMART DJ, DJ effect and AUTO DJ at the same time. If you select one, another will be turned off automatically.

DJ EFFECT

It allows you to enjoy DJ EFFECT such as scratch sound and Flanger/Phaser/Chorus/Delay FX sound effect.

1. Rotate **DJ EFFECT CONTROL** while press and hold **DJ EFFECT** on the unit.

   The display window changes each time

   SCRATCH-> FLANGER ->PHASER-> CHORUS-> DELAY -> SCRATCH

Display Window	Description
SCRATCH	You can hear effect of scratch sound depending on the direction in which you turn **DJ EFFECT CONTROL**.
FLANGER	You can hear effect of flanger sound depending on the direction in which you turn **DJ EFFECT CONTROL**.
PHASER	You can hear effect of phaser sound depending on the direction in which you turn **DJ EFFECT CONTROL**.
CHORUS	You can hear effect of chorus sound depending on the direction in which you turn **DJ EFFECT CONTROL**.
DELAY	You can hear effect of delay sound depending on the direction in which you turn **DJ EFFECT CONTROL**.

2. Remove your hands from DJ EFFECT key in the moment, the effect is activated.
   To cancel it, rotate **DJ EFFECT CONTROL** during press and hold **DJ EFFECT**. Remove your hands from **DJ EFFECT** when "DJ EFFECT OFF" appears in display window.

Adjusting the effect level

You can adjust DJ EFFECT sound Gage level between 0 to 15. As the effect level moves from 0 to15, SMART DJ effect appears more frequently and makes the sound feel more powerful.

(Exception in SCRATCH mode.) To adjust the Gage (Depth) of the DJ Effect mode, two conditions must be satisfied.(Gage level 0-15)

- Remove your hands from DJ Effect key.

- Turn DJ EFFECT CONTROL clockwise or counterclockwise. (Exception in SCRATCH mode.)

Note

- Input **DJ EFFECT** key when Smart DJ feature in the on state, then Smart DJ is released and DJ EFFECT mode is entered.
- This feature is only available in CD function or USB function.
- There are DJ EFFECT mode display for 3 seconds when **DJ EFFECT** Key is inputed.
- Initial effect mode is the SCRATCH.
- Gage start at the beginning with the initial 8 level.
- The current Gage level is displayed when adjusting Gage. (Exception in the SCRATCH mode)
- If the function changes to the others or turn off and on the unit on DJ EFFECT mode, DJ EFFECT will be turned off.
- If you record your music you are listening to on DJ EFFECT mode, DJ EFFECT will be turned off.
- If DJ EFFECT is turned off, you should turn it on again to enjoy the effect.

DJ Pro.

It allows you to mix such as CLUB and FOOTBALL Sound by selecting.

- DJ Pro operates in the two modes such as CLUB and FOOTBALL.

Display Window	Description
DJ PRO CLUB	You can hear such as CLUB sound effect in which you press **DJ Pro.**.
DJ PRO FOOTBALL	You can hear such as FOOTBALL sound effect in which you press **DJ Pro.**.

Note

- Initial DJ Pro mode is CLUB mode.
- There are DJ Pro mode display for 3 seconds when **DJ Pro.** Key is inputed.
- It is mixed DJ sound that to mapping the key when **DJ Pro.** Key is inputed.

- DJ Pro mode on the CLUB, the Key mapping the CLUB sound effect playback.

- DJ Pro mode on the FOOTBALL, the Key mapping the FOOTBALL sound effect playback.

- Currently playing DJ sound is stopped and be selected the DJ Pro sound mix start when it is inputed other **DJ Pro.** Key while DJ sound is playing.
- DJ Pro operates while operating the Smart DJ.
- Display does not show Input **DJ Pro.** Key.

AUTO DJ playback

Auto DJ blends the end of one song into the beginning of another for seamless playback. It equalizes volume across tracks/files for uninterrupted playback.

Press **AUTO DJ** on the remote control or unit repeatedly, the display changes as followings. RANDOM (AUTO DJ RANDOM) -> REPEAT ALL (AUTO DJ SEQUENTIAL) -> (AUTO DJ OFF)

Mode	Display Window	Description
OFF	- (AUTO DJ OFF)	-
RANDOM	RANDOM (AUTO DJ RANDOM)	The music is played randomly on this mode.
REPEAT	REPEAT ALL (AUTO DJ SEQUENTIAL)	The music is played repeatedly on this mode.

Note

- It is not supported on the AUTO DJ mode to search for a section within a track/file or to play repeatedly or randomly.
- During AUTO DJ mode, it is not available to press **PRESET·FOLDER** ∧/∨ on the remote control or **FOLDER** on the unit.
- If you move to other functions or stop the music using ☐ on the unit (or ■ **ENTER** on the remote control) on AUTO DJ mode, AUTO DJ function will be disable.
- AUTO DJ function is not supported in the music file whose length is less than 60 seconds.
- During recording, AUTO DJ function is not available.
- Only AUTO DJ SEQUENTIAL is selected when played JUKE BOX list.

JUKE BOX Playback (Program play)

JUKE BOX function enables you to make a playlist of your favourite tracks/files from a disc or USB device. A playlist of up to 100 tracks/files can be entered.

Making JUKE BOX list

It is supported only on stop status.

1. Press and hold **JUKE BOX** to enter the edit mode.
2. Select a track/file by pressing **⏮ / ⏭** on the remote control or by turning **FILE SEARCH** on the unit.
3. Press **JUKE BOX** to save the track/file.
4. Repeat steps 2 to 3 to store the other tracks/files.
5. Press **JUKE BOX** once again.

To play the JUKE BOX list, press **► / II** after you make the list.

Enjoying JUKE BOX

Press **JUKE BOX** twice on stop status. "JUKE BOX ON" appears on the display window. To play JUKE BOX list, press **► / II** on the remote control or **>II** on the unit.

To cancel it, press **JUKE BOX** twice. "JUKE BOX OFF" appears on the display window.

Deleting JUKE BOX list

Deleting function is worked only on the edit mode. Refer to "Making JUKE BOX list" step 1.

1. Select a song by pressing JUKE BOX repeatedly.

2. Press **DELETE** while a song is selected.

To delete all the songs on JUKE BOX list, press **■ ENTER** on the remote control or **□** on the unit.

! Note

- To check the status of JUKE BOX, press **JUKE BOX** once. You can also check it by the word "PROG." on the display window.
- If there is no JUKE BOX list, "JUKE BOX NONE" appears on the display window when you press **JUKE BOX**.
- JUKE BOX is switched off in the case below.
  - Changing the function to the others.
  - Turning off and on the unit.
  - Operating the numeric buttons on the remote control.
  - Playing a file by using **FOLDER** and **MULTI JOG**.
- JUKE BOX list is cleared in the case below.
  - Removing the disc or the USB device.
  - Deleting or recording music files in the USB device.

Using a Bluetooth wireless technology

About Bluetooth

Bluetooth® is wireless communication technology for short range connection.

The sound may be interrupted when the connection interfered by the other electronic wave or you connect the bluetooth in the other rooms.

Connecting individual devices under ***Bluetooth®*** wireless technology does not incur any charges. A mobile phone with ***Bluetooth®*** wireless technology can be operated via the Cascade if the connection was made via ***Bluetooth®*** wireless technology. Available Devices : Mobile phone, MP3, Laptop, PDA.

Bluetooth Profiles

In order to use ***Bluetooth®*** wireless technology, devices must be able to interpret certain profiles. This unit is compatible with following profile.

A2DP (Advanced Audio Distribution Profile)

Listening to music stored on the Bluetooth devices

Before you start the pairing procedure, make sure the Bluetooth feature is turned on in to your Bluetooth device. Refer to your Bluetooth device's user guide. Once a pairing operation is performed, it does not need to be performed again.

1. Select the Bluetooth function by using the **FUNCTION** or **AUX / BLUETOOTH / MIC. / PORT. IN**
   "BT READY" appears on the display window.
2. Operate the Bluetooth device and perform the pairing operation. When searching for this unit with the Bluetooth device, a list of the devices found may appear in the Bluetooth device display depending on the type of Bluetooth device. Your unit appears as "LG MINI(XX:XX)".

Note

XX:XX means the last four digits of BT address. For example, if your unit has a BT address such as 9C:02:98:4A:**F7:08**, you will see "LG MINI(**F7:08**)" on your Bluetooth device.

3. Enter the PIN code.
   PIN code : 0000
4. When this unit is successfully connected with your Bluetooth device, "PAIRED" will appear on the display window and bluetooth indicator will be lit up.

Note

Depending on the Bluetooth device type, some device have a different pairing way.

5. Listen to music.
   To play a music stored on your Bluetooth device, refer to your Bluetooth device's user guide.

Note

- Sound from the main set can be distorted if you raise the volume of Bluetooth device up to two-thirds or more.
- When you use the bluetooth function, adjust the volume of a bluetooth device to a proper level to listen to.

Note

- When using Bluetooth® technology, you have to make a connection between the unit and the bluetooth device as close as possible and keep the distance.
  However it may not work well in the case below :
  - There is a obstacle between the unit and the bluetooth device.
  - There is a device using same frequency with ***Bluetooth®*** technology such as a medical equipment, a microwave or a wireless LAN device.
- You should connect your Bluetooth device to this unit again when you restart it.
- The sound may be interrupted when the connection interfered by the other electronic wave.
- You cannot control the Bluetooth device with this unit.
- Pairing is limited one Bluetooth device per one unit and multi-pairing is not supported.
- Depending on the type of the device, you may not be able to use the Bluetooth function.
- You can enjoy wireless system using phone, MP3, Notebook, etc..
- When not connected the Bluetooth, "BLUETOOTH" and "BT READY" appears on the control panel.
- When someone stands and interrupts communication between Bluetooth device and the player, the connection will be disconnected.
- The more distant between the unit and the bluetooth device, the lower the sound quality becomes.
- When Bluetooth connection is disconnected, connect the bluetooth device to the unit again.

Using Bluetooth App

Note

Only Android OS is available to use "LG Bluetooth Remote" app with this unit.

About "LG Bluetooth Remote" App

"LG Bluetooth Remote" app brings a suite of new features to this unit.

To enjoy more features, you are recommended to download and install free "LG Bluetooth Remote" app.

Install "LG Bluetooth Remote" App onto Your Bluetooth Device

1. Install "LG Bluetooth Remote" app through QR code. Use the scanning software to scan the QR code.
2. Tap an icon for installation.
3. Tap an icon for downloading.

Note

- Make sure that your Bluetooth device is connected to the Internet.
- Make sure that your Bluetooth device has a scanning software application. If you don't have one, download one from "Google Android Market (Google Play Store)".

Install "LG Bluetooth Remote" App through "Google Android Market (Google Play Store)"

1. Tap the "Google Android Market (Google Play Store)" icon.
2. In the search bar, type in the "LG Bluetooth Remote" and search it.
3. In the search result list, find and tap "LG Bluetooth Remote" to start downloading Bluetooth app.
4. Tap an icon for installation.
5. Tap an icon for downloading.

Note

- Make sure that your Bluetooth device is connected to the Internet.
- Make sure that your Bluetooth device is equipped with "Google Android Market (Google Play Store)".

NFC

NFC allows you to install and open "LG Bluetooth Remote" app to NFC-enabled phone.

1. Activates the NFC feature of your NFC-enabled phone.
2. Turn on the unit.
3. Tag the back of your NFC-enabled phone over the unit.

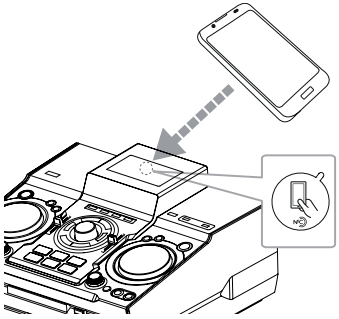

- If "LG Bluetooth Remote" app is not installed on your NFC-enabled phone, the linked screen with "LG Bluetooth Remote" app is displayed.
- If "LG Bluetooth Remote" app is installed on your NFC-enabled phone, "LG Bluetooth Remote" app is activated.

Note

- You must activate the NFC feature of your NFC-enabled phone.
- If your NFC-enabled phone's screen is locked, it will not read the NFC.
- If your smart phone case is plated with chrome, NFC is unavailable. Depending on your case's material or thickness, NFC may not be read well.

Activate Bluetooth with "LG Bluetooth Remote" App

"LG Bluetooth Remote" app helps to connect your bluetooth device to this unit.

1. Tap "LG Bluetooth Remote" app icon on the home screen to open "LG Bluetooth Remote" app, and go to the main menu.
2. Tap [Setting] and select the unit you want.
3. If you want to get more information to operate, tap [Setting] and [Help].

Note

- BT app will be available in the software version as follow;
  - Android O/S : Ver 2.3.3 (or later)
- This unit does not support the multi-pairing. If this unit is already connected with other Bluetooth device, disconnect that device and then try again.
- If you use "LG Bluetooth Remote" app for operation, there would be some differences between "LG Bluetooth Remote" app and the supplied remote control. Use the supplied remote control as necessary.
- Depending on the Bluetooth device, "LG Bluetooth Remote" app may not work.
- The connection you've made may be disconnected if you select other application or change the setting of the connected device via "LG Bluetooth Remote" app. In such a case, please check the connection status.
- After connection of BT app, music may be output from your device. In this case, try connecting procedure again.

Radio Operations

Be sure that FM aerial is connected. (Refer to the page 20)

Listening to the radio

1. Press **TUNER** on the unit or **FUNCTION** on the remote control until FM appears in the display window.
   The last received station is tuned in.
2. Auto tuning :
   Press and hold **TUNING-/+** on the remote control or **I<< / >>I** on the unit for about two seconds until the frequency indication starts to change, then release. Scanning stops when the unit tunes in a station.

   Or

   Manual tuning :
   Press **TUNING-/+** on the remote control or **I<< / >>I** on the unit repeatedly.
3. Adjust the volume by rotating volume knob on the unit or by pressing **VOL +/-** on the remote control repeatedly.

Improving poor FM reception

Press **>II** on the unit or **►/II** on the remote control. This will change the tuner from stereo to mono and usually improve the reception.

Presetting the Radio Stations

You can preset 50 stations for FM.

Before tuning, make sure to turn down the volume.

1. Press **TUNER** on the unit or **FUNCTION** on the remote control until FM appears in the display window.
2. Press **TUNING-/+** on the remote control or **|<</>>|** on the unit to select a desired frequency.
3. Press **TUNER MEMORY**. A preset number will blink in the display window.
4. Press **PRESET·FOLDER ∧/∨** to select the preset number you want.
5. Press **TUNER MEMORY**. The station is stored.
6. Repeat steps 2 to 5 to store other stations.
7. To listen a preset station, press **PRESET·FOLDER ∧/∨** or **0** to **9** numerical buttons.

Deleting all the saved stations

1. Press and hold **TUNER MEMORY** for two seconds.
   "ERASE ALL" will flash up on the unit display.
2. Press **TUNER MEMORY** to erase all the saved radio stations.

Seeing information about a Radio station

The FM tuner is supplied with the RDS (Radio Data System) facility. This shows information about the radio station being listened to. Press **RDS/SET** repeatedly to cycle through the various data types:

PS	(Programme Service Name) The name of the channel will appear in the display.
PTY	(Programme Type Recognition) The programme type (e.g. Jazz or News) will appear in the display.
RT	(Radio Text) A text message contains special information from the broadcast station. This text may scroll across the display.
CT	(Time controlled by the channel) This shows the time as broadcast by the station.

You can search the radio stations by programme type by pressing **RDS/SET**. The display will show the last PTY in use. Press **PTY** one or more times to select your preferred programme type. Press and hold **|◀◀/▶▶|**. The tuner will search automatically. When a station is found the search will stop.

Other Operations

Turn off the sound temporarily

Press **MUTE** to mute your remote control.

You can mute your unit, for example, to answer the telephone, the mute icon "" is blinked in the display window.

Displaying file information (ID3 TAG)

While playing an MP3 file containing file information, you can display the information by pressing **INFO**.

DEMO

In the power off state, it demonstrates the function on display window with a demo sound and a display by pressing **SPK LIGHTING/DEMO**.
To cancel the DEMO, press it again.

Note

- While DEMO, this unit will keep DEMO status even if you unplug the power cord connection.
- You can enjoy other functions during the DEMO. Then the DEMO will pause to temporary.
  - Without input key in 10 sec, the DEMO will play back automatically.

Using Microphone

It is available on the function as follows : CD, USB, AUX-MIC and BLUETOOTH.

1. Connect your microphone to the MIC jack.
2. Play the music you want.
3. Sing along with the accompaniment. Adjust the microphone volume by rotating **MIC VOL.** clockwise or unclockwise on the unit.

Note

- When not using the microphone, set the **MIC VOL.** to minimum or turn off the MIC and remove the microphone from the MIC jack.
- If the microphone is set too near the speaker, a howling sound may be produced. In this case, move the microphone away from the speaker or decrease the sound level by using the **MIC VOL.**.
- If sound through the microphone is extremely loud, it may be distorted. In this case, rotate **MIC VOL.** to minimum.
- AUX-MIC function enables only your voice to output.

Switching on and off the speaker lighting

SPEAKER LIGHTING : The function is to light automatically to the music sound when music is being played.

You can select on/off mode of the speaker light by pressing **SPK LIGHTING/DEMO** on the unit.

To turn off the light, press **SPK LIGHTING/DEMO** repeatedly until the light will be turned off.

Using X-FLASH

X-FLASH : The function is to create an atmosphere of Club by operating lighting automatically or manually when a strong beat music is being played.

1. Press the **X-FLASH ON/OFF** on the unit.
2. Turn the **X-FLASH LEVEL** clockwise or counterclockwise.

   The display window changes each time

   OFF-> LEVEL1 ->LEVEL2-> LEVEL3-> LEVEL4 -> OFF
3. Play the level you want.

Note

- X-FLASH function enables in all functions.
- X-FLASH mode is retained previous mode when you press the **X-FLASH ON / OFF.**
- X-FLASH effect depend on the LEVEL.
- The SPEAKER LIGHTING and X-FLASH may not work properly according to Low Input level or Connected external device (Low Volume, Device Type, Play sound source, connection mode, etc.).
- The SPEAKER LIGHTING and X-FLASH (Level 1) are the LED lights up only during operation (Disc playback, USB playback, Radio Listening, and other external input). It is only possible when the unit is in operation.

Sound adjustment

Setting the surround mode

This system has a number of pre-set surround sound fields. You can select a sound mode you want by using **SOUND EFFECT** on the remote control.

The displayed items for the Equalizer may be different depending on sound sources and effects.

On Display	Description
NATURAL	You can enjoy comfortable and natural sound.
Local Specialization equalizer	Regionally optimized sound effect. (FORRO/FUNK/SERTANEJO/DANGDUT/ARABIC/PERSIAN/INDIA/REGUETON/MERENGUE/SALSA/SAMBA/CUMBIA/AFRO HIP HOP)
AUTO EQ	Realizes the sound equalizer that is the most similar to the genre of which is included in the MP3 ID3 tag of song files.
POP CLASSIC JAZZ ROCK	This program lends an enthusiastic atmosphere to the sound, giving you the feeling you are at an actual rock, pop, jazz or classic concert.
MP3 - OPT	This function is optimized for compressible MP3 file. It improves the treble sound.
BASS BLAST	Reinforces the treble, bass and surround sound effect.
LOUDNESS	Improves the bass and treble sound.
BYPASS	You can enjoy the sound without equalizer effect.
FOOTBALL	You can enjoy the sound effect FOOTBALL STADIUM.

Note

- On some speakers, sound may not be heard or heard in low sound depending on the sound mode.
- Maybe you need to reset the surround mode, after switching the input, sometimes even after the sound track/file changed.
- By pressing **BASS BLAST** on the unit you can directly select the BYPASS or BASS BLAST sound.

Setting the USER EQ

You can listen to music with equalizer by adjusting the sound level yourself.

1. Press **USER EQ**. "USER EQ" is displayed.
2. Adjust the sound level by sliding up and down **BASS**, **TREBLE** knob.

Setting the Clock

1. Turn the unit on.
2. Press **CLOCK**.
3. Select time mode by turning **MULTI JOG** on the unit or press **⏮ / ⏭** on the remote control.
   - AM 12:00 (for an AM and PM display) or 0:00 (for a 24 hour display)
4. Press **RDS/SET** to confirm your selection.
5. Select the hours by turning **MULTI JOG** on the unit or press **⏮ / ⏭** on the remote control.
6. Press **RDS/SET**.
7. Select the minutes by turning **MULTI JOG** on the unit or press **⏮ / ⏭** on the remote control.
8. Press **RDS/SET**.

Setting the Clock through "LG Bluetooth Remote" App

Install "LG Bluetooth Remote" app on your Android device. (see page 28 - 30)

Your unit's clock will be automatically synchronized with your device by activating Bluetooth connection through "LG Bluetooth Remote" app.

Using your player as an alarm clock

1. Turn the unit on.
2. Press **TIMER**. Each of functions flashes.
3. Press **RDS/SET** when the function you want to be woken by is showing.
4. "ON TIME" will be displayed. Turn **MULTI JOG** on the unit or press **⏮ / ⏭** on the remote control to change the hours and minutes and press **RDS/SET** to save.
5. The "OFF TIME" will be displayed. Turn **MULTI JOG** on the unit or press **⏮ / ⏭** on the remote control to change the hours and minutes and press **RDS/SET** to save.
6. Turn **MULTI JOG** on the unit or press **⏮ / ⏭** on the remote control to change the volume and press **RDS/SET** to save. The clock icon "🕒" shows that the alarm is set.
7. Press **TIMER** button 2 times. You can check the setting status.

Note

- If you set the clock time, you can check the time by pressing **CLOCK** even when the player is turned off.
- If you set the clock time and alarm, you can check the alarm icon "🕒" by pressing **CLOCK** even when the player is turned off.
- If you set the clock time and alarm, you can check the alarm icon "🕒" and setting informaiton by pressing **TIMER** even when the unit is turned off.
- To reset the time, press and hold **CLOCK** or **TIMER**. And then follow the setting step from 3.

Sleep Timer Setting

Press **SLEEP** repeatedly to select delay time between 10 and 180 minutes. After the delay time, the unit will be turned off.

To cancel the sleep function, press **SLEEP** repeatedly until "SLEEP 10" appears, and then press **SLEEP** once again while "SLEEP 10" is displayed.

Note

- You can check the remaining time before the unit is turned off.
- Press **SLEEP**. The remaining time appears in the display window.

Dimmer

Press **SLEEP** once. The display window will be darkened by half. To cancel it, press **SLEEP** repeatedly until dim off.

Auto power down

This unit will turn off itself to save electric consumption in the case were main unit is not connected to external device and is not used for 25 minutes.
So does this unit after six hours since Main unit has been connected to other device using analogue input.

Advanced Operations

Recording to USB

You can record a various sound source to USB.
(CD, USB, AUX, AUX-MIC ,PORTABLE, FM)

1. Connect the USB device to the unit.
2. Select a function in which you want to record by using **CD**, **USB**, **TUNER**, or **AUX / BLUETOOTH / MIC. / PORT. IN** on the unit or **FUNCTION** on the remote control.

   One track/file recording - You can record to USB after playing a track/file you want.

   All tracks/files recording - You can record to USB after stop.

   JUKE BOX list recording - After showing the JUKE BOX list, you can record it to USB.
   (Refer to the page 26)
3. Press **USB REC** on the unit or **USB REC** on the remote control.

   - If you connect both **USB1** and **USB2**, press **>II** to record to **USB1** or press □ to record to **USB2**.
4. To stop recording, press □ on the unit or ■ **ENTER** on the remote control.

Pausing recording

During recording, press **USB REC** on the unit or **USB REC** on the remote control to pause recording. Press it again to restart recording.
(TUNER/AUX/AUX-MIC/PORTABLE only)

Note

- You can control recorded MIC sound according to MIC volume when you record in CD 1 speed REC.
- Depending on the sound recording in MIC Input when you record in AUX-MIC Function. (No matter the MIC volume control.)

To select recording bit rate and speed

1. Press **USB REC** on the unit or **USB REC** on the remote control for longer than 3 seconds.
2. Press ⏮/⏭ on the remote control or ⏪/⏩ on the unit to select a bit rate.
3. Press **USB REC** on the unit or **USB REC** on the remote control again to select the recording speed.
4. Press ⏮/⏭ on the remote control or ⏪/⏩ on the unit to select a desired recording speed. (AUDIO CD only)

   X1 SPEED
   - You can listen to music while recording it.

   X2 SPEED
   - You can just record the music file.
5. Press **USB REC** on the unit or **USB REC** on the remote control to finish the setting.

Dubbing USB to USB

You can do dubbing a various sound source in **USB1** to **USB2** on USB function.

1. Connect a USB device including desired sound files to **USB1**.
2. Connect another USB device to **USB2**.
3. Press **USB REC** on the unit or **USB REC** on the remote control.
4. To stop recording, press ☐ on the unit or ■ **ENTER** on the remote control.

The making of unauthorized copies of copy-protected material, including computer programs, files, broadcasts and sound recordings, may be an infringement of copyrights and constitute a criminal offense. This equipment should not be used for such purposes.
Be responsible
Respect copyrights

Note

- It is not supported to record music stored on bluetooth device.
- You can check the recording percentage rate for the USB record on the display window during the recording. (MP3/WMA, CD Only)
- During recording MP3/WMA, there is no sound.
- For stable recording, the output sound level goes down on its own when you record music from CD to USB.
- You can only change volume level between MIN and 10 during recording. It will be kept even after recording.
- When you stop recording during playback, the file that has been recorded at that time will be stored. (Except MP3/WMA files)
- Do not remove the USB device or turn off the unit during USB recording. If does not, an incomplete file may be made and not deleted on PC.
- If USB recording does not work, the message like "NO USB", "ERROR", "USB FULL" or "NO REC" is displayed on the display window.
- Multi card reader device or External HDD can not be used for USB recording.
- A file is recorded by about 512 Mbyte when you record for a long term.
- You may not store more than 999 files.
- Sound of MIC or DJ Pro is recorded only during audio CD 1 speed REC. It is recorded audio CD source too.
- It'll be stored as follows.

AUDIO CD	MP3/WMA	The other source*
CD_REC TRK_001 TRK_002 ⋮	FILE_REC ABC(File name) DEF(File name) ⋮	EXT_REC AUDIO_001 AUDIO_002 ⋮

* : TUNER, AUX and the like.

Troubleshooting

General

Problem	Cause & Solution
No Power.	• The power cord is not plugged in. Plug in the power cord. • Check whether electricity failed. Check the condition by operating other electronic devices.
No sound.	• Check whether you select right function. Press **FUNCTION** and check the selected function. • If not, connect speaker cables correctly. Speaker cables connected correctly.
The unit does not start playback.	• An unplayable disc is inserted. Check the playable disc. • No disc is inserted. Insert a disc. • The disc is dirty. Clean the disc. (Refer to the page 43) • The disc is inserted upside down. Place the disc with the label or printed side facing upwards.
Radio stations cannot be tuned in properly.	• The antenna is positioned or connected poorly. Connect the antenna securely. • The signal strength of the radio station is too weak. Tune to the station manually. • No stations have been preset or preset stations have been cleared (when tuning by scanning preset channels). Preset some radio stations, see page 31 for details.
The remote control does not work properly.	• The remote control is too far from the unit. Operate the remote control within about 23 ft (7 m). • There is an obstacle in the path of the remote control and the unit. Remove the obstacle. • The batteries in the remote control are exhausted. Replace the batteries with new ones.
No speaker light	• Check whether the speaker light cables are connected to the unit correctly. Connect the speaker light cables to the unit correctly. • Check the speaker light effects by pressing **SPK LIGHTING/DEMO** or **X-FLASH ON / OFF**.

Trademarks and Licenses

Bluetooth® wireless technology is a system which allows radio contact between electronic devices.

Connecting individual devices under ***Bluetooth®*** wireless technology does not incur any charges. A mobile phone with ***Bluetooth®*** wireless technology can be operated via the Cascade if the connection was made via ***Bluetooth®*** wireless technology.

The ***Bluetooth®*** word mark and logos are owned by the ***Bluetooth®*** SIG, Inc. and any use of such marks by LG Electronics is under license.

Other trademarks and trade names are those of their respective owners.

General specifications

General	
Power requirements	Refer to the main label.
Power consumption	Refer to the main label.
Dimensions (W x H x D)	(520.3 x 255 x 423) mm
Net Weight (Approx.)	8.7 kg
Operating temperature	5 °C to 35 °C (41 °F to 95 °F)
Operating humidity	60 %
Bus Power Supply	5 V ⎓ 500 mA

Inputs	
AUX IN	2.0 Vrms (1 kHz, 0 dB), 600 Ω, RCA jack (L, R)
PORT. IN	1.2 Vrms (3.5 mm stereo jack)
MIC	18 mV

Tuner	
FM Tuning Range	87.5 to 108.0 MHz or 87.50 to 108.00 MHz

CD	
Frequency Response	40 to 20 000 Hz
Signal-to-noise ratio	75 dB
Dynamic range	80 dB

Amplifier	
Output	725 W x 4 (8 Ω at 1 kHz, THD 25 %)

- Design and specifications are subject to change without notice.

Speakers specifications

speaker		
Type	Low channel	1 Way 1 speaker
	High channel	2 way 3 speaker
Impedance	8 Ω	
Rated Input Power	725 W	
Max. Input power	1450 W	
Dimensions (W x H x D)	(513 x 719 x 481) mm	
Net Weight	31.8 kg	

- Design and specifications are subject to change without notice.

Maintenance

Notes on Discs

Handling Discs

Never stick paper or tape on the disc.

Storing Discs

After playing, store the disc in its case. Do not expose the disc to direct sunlight or sources of heat and never leave it in a parked car exposed to direct sunlight.

Cleaning Discs

Fingerprints and dust on the disc can cause poor picture quality and sound distortion. Before playing, clean the disc with a clean cloth. Wipe the disc from the center to out.

Do not use strong solvents such as alcohol, benzine, thinner, commercially available cleaners, or anti-static spray intended for old vinyl records.

Handling the Unit

When shipping the unit

Please save the original shipping carton and packing materials. If you need to ship the unit, for maximum protection, re-pack the unit as it was originally packed at the factory.

Keeping the exterior surfaces clean

Do not use volatile liquids such as insecticide spray near the unit. Wiping with strong pressure may damage the surface. Do not leave rubber or plastic products in contact with the unit for a long period of time.

Cleaning the unit

To clean the player, use a soft, dry cloth. If the surfaces are extremely dirty, use a soft cloth lightly moistened with a mild detergent solution. Do not use strong solvents such as alcohol, benzine, or thinner, as these might damage the surface of the unit.

Maintaining the Unit

The unit is a high-tech, precision device. If the optical pick-up lens and disc drive parts are dirty or worn, the picture quality could be diminished. For details, please contact your nearest authorized service center.

Technology with the human touch

GUARANTEE

- LG Electronics U.K. Ltd. will provide the following services in order toexpedite this Guarantee.

1. All faulty components which fail due to defective manufacture will be replaced free of charge for a period of 12 months from the original date of purchase.
2. The dealer (or his service agent) who sold the product will be reimbursed for any labour provided in the repair of this LG equipment, for a period of 12 months from the original date of purchase. These claims must be made in accordance with the published scale of service charges and relevant claims procedure.

PLEASE NOTE:

A. The dealer may restrict the guarantee to the original purchaser.

B. The dealer is not obliged to carry out service under guarantee if unauthorized modifications are made to the apparatus, or if non standard components are used or if the serial number of the apparatus is removed, defaced, misused, or altered.

C. Any claims made under guarantee must be directed to the dealer from whom the equipment was originally purchased. The dealer may, before carrying out service under guarantee, require a receipted account as evidence of the date of purchase.

D. We respectfully point out that your dealer is not obligated to replace batteries if they become exhausted or worn in use.

E. Aerial alignment and consumer control adjustments are not covered by this guarantee.

This guarantee does not affect your statutory rights.

- REQUIREMENTS TO MAINTAIN WARRANTY COVERAGE:
  RETAIN YOUR RECEIPT TO PROVE DATE OF PURCHASE. A COPY OF YOUR RECEIPT MUST BE SURRENDERED AT THE TIME GUARANTEE SERVICE IS PROVED.
- Product Registration Card :
  It is helpful to complete at least your name, address, phone, model & serial numbers and return it. This will enable LG to assist you in the future should you lose your receipt, your units be stolen, or should modifications be necessary.
- To obtain information or assistance: Call 0844 847 5454

MODEL NO.*	SERIAL NO.*	DATE OF PURCHASE.*

In all cases of difficulty - consult your LG dealer from whom the product was purchased

LGEUK Website : www.lg.com/uk
(Service website : www.lg.com/uk/support)

LG
Life's Good