Miele

WWD380 WCS PWash&Steam&9kg
W1 front loader washing machine:
9 kg I 1400 rpm I SteamCare I QuickPowerWash I Miele@home



EAN: 4002516863236 / Material number: 12704860 /
Old Material Number: 11WD3801AUS

General information	
Model identifier	WWD380 WCS PWash&Steam&9kg
Manufacturer material number	12704860
EAN number	4002516863236
Marketing class	Gold
Construction type	
Suitable for stacking	•
Side-by-side	•
Built-in	•
Door hinge	right
Model	
Product brand	W1 White Edition
Front-loader	•
Spinning	
Max. spin speed	1400
Rinse hold	•
Without spin function	•
Design	
Appliance colour	Lotus white
Control panel colour	Lotus white
Door design	Obsidian Black with white ring
Rotary selector colour	Lotus White
Control panel version	5° inclined
Control type	Rotary selector
Display	DirectSensor white, 7 segment
Cleaning performance	
Innovative PowerWash technology	•
CapDosing portioned dispensing	•
Gentle laundry care	
Honeycomb drum	•
Load in kg	9
User convenience	
Networking with Miele@home	•
Delay start up to 24 hours	•
Time left display	•
AutoClean detergent drawer	•
AddLoad	•
Smart Extras	
MobileStart	•
AI Diagnostics	•
RemoteUpdate	•
Push notifications	•
Smart Home Integration	•
Efficiency	
Low temperature wash “Cold” and “20 °C”	•

- Energy/WELS Star Rating: 4.5/4.5
- WELS Details: 77 L / wash Eco 40-60 Program
- Registration Details Energy/ WELS C02418

- SteamCare reduces ironing time by up to 50 % and freshens up your clothes
- QuickPowerWash ensures fast, efficient results in just 49 minutes*
- Complete App control of your washing machine with Miele@ home**

* This applies equally to all Miele washing machines, which are able to replicate the process and technical machine parameters laid out in the conclusion of the WL 1110/18 test report.

** This is a separate digital offer from Miele & Cie. KG. The range of functions can vary depending on the model and the country. Acceptance of the Terms and Conditions and Privacy Policy for Miele digital products and services in the Miele App required. Miele reserves the right to change or discontinue the digital offer at any time.

WWD380 WCS PWash&Steam&9kg
W1 front loader washing machine:
9 kg I 1400 rpm I SteamCare I QuickPowerWash I Miele@home



EAN: 4002516863236 / Material number: 12704860 /
Old Material Number: 11WD3801AUS

Automatic load control	•
Flow meter	•
Foam sensing	•
DuraLife motor	•
Wash programmes	
QuickPowerWash	•
Cottons (coloureds)	•
Minimum iron	•
Delicates	•
Shirts	•
Woollens (hand-washable)	•
Express 20	•
Dark garments/Denim	•
Freshen up (steam)	•
Drain/Spin	•
ECO 40-60	•
Washing extras	
Short	•
Pre-wash	•
Water plus	•
Additional rinse cycle	•
Pre-ironing with steam	•
Buzzer	•
Safety	
Water protection system	Watercontrol-System
Safety lock	•
PIN code	•
Optical interface	•
Technical data	
Dimensions (H x W x D) in mm	850 x 596 x 643
Dimensions in mm (width)	596
Dimensions in mm (height)	850
Dimensions in mm (depth)	643
Appliance depth in mm with opened door	1077
Weight in kg	80
Voltage in V	230
Fuse rating in A	10
Frequency in Hz	50
Total rated load in kW	2.30
Length of water inlet hose in m	1.60
Length of water drain hose in m	1.50
Length of supply lead in m	2

WWD380 WCS PWash&Steam&9kg
W1 front loader washing machine:
9 kg I 1400 rpm I SteamCare I QuickPowerWash I Miele@home

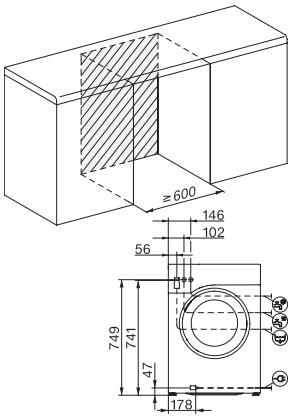

W1 drawing, facia 5 degree, measures in mm

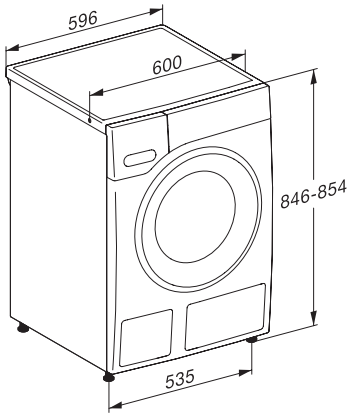

W1 drawing, facia 5 degree, measures in mm

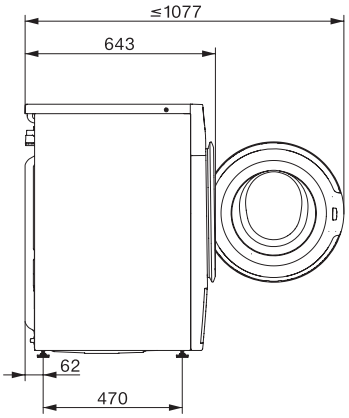

W1 drawing, facia 5 degree, measures in mm

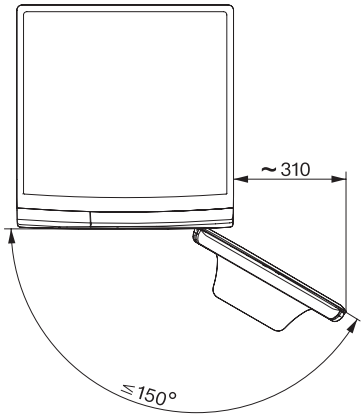

W1 drawing, facia 5 degree, measures in mm