CANTINA

WINE CARE

116 Can Freestanding Beverage Centre

CBC86B

V1.2 1126

Contents

03 Welcome

04 Important Safety Instructions

06 Your Beverage Centre

07 Installation Instructions

08 Operation Instructions

09 Care & Maintenance

10 Troubleshooting Guide

12 Technical Specifications

14 Purchase Details

15 Warranty Information

Welcome

Residentia Group

Office	165 Barkly Avenue Burnley Victoria Australia 3121
ACN	70 600 546 656
Online	residentia.group cantinawinecare.com
Post	PO BOX 5177 Burnley Victoria Australia 3121
Phone	1300 11 4357
Email	support@residentia.group

Congratulations on purchasing your new Beverage Centre!

Cantina is distributed, designed and engineered in Australia by Residentia Group Pty Ltd.

Please refer to the warranty chapter at the rear of this manual for information regarding your product's parts and labour warranty, or visit us online at:

→ www.cantinawinecare.com

Here at Residentia Group, we are customer obsessed and our Support Team are there to ensure you get the most out of your appliance. Should you want to learn more about your unit, and importantly, taking care of the appliance, our Support Team are here to help. You can use our online Support Centre at any time by visiting:

→ www.support.residentiagroup.com.au

Or you can contact us by dialling: 1300 11 HELP (4357)

It is important that you read through the following user manual thoroughly, in order to familiarise yourself with the installation and operation requirements of your appliance, and to ensure optimum performance.

Again, thank you for choosing an Cantina and we look forward to being of service to you.

Kind Regards,

The Residentia Team

– **Customer Care**

At Residentia Group, we strongly encourage the use of authentic spare parts to guarantee the best results. When contacting our spare parts team through 1300 11 HELP, or by emailing parts@residentiagroup.com.au, please ensure that you have the model and serial numbers on hand, which are found on your appliances' rating plate.

Important Safety Instructions

Your safety and the safety of others are very important.

This Beverage Centre complies with the applicable safety requirements and is safe for daily use. However, basic safety precautions should always be followed when using an electrical appliance, to reduce the risk of fire, electric shock, and personal injury.

Danger

- Plug into its own individual electrical outlet with a voltage rating that matches the rating label on Beverage Centre **(220V/50Hz)**. Use receptacles that cannot be turned off by a switch or pull chain. Be sure that the plug is fully inserted into the receptacle.
- Plug into a grounded 3-prong outlet. Do not under any circumstances cut or remove the third ground prong from the power cord supplied.
- To protect against electric shock, do not immerse the Beverage Centre, plug or cord in water or other liquids.
- Never unplug Beverage Centre by pulling the power cord. To disconnect the Beverage Centre, always grip the plug firmly and pull straight out from the wall outlet.
- Repair or replace immediately all power cords that have become frayed or otherwise damaged. Do not use a cord that shows cracks or abrasion damage along its length or at either end.
- Do not connect or disconnect the electric plug when your hands are wet. Do not operate Beverage Centre with wet hands, while standing on a wet surface or while standing in water.
- Unplug the Beverage Centre or disconnect power before cleaning or servicing. Failure to do so can result in electrical shock or death.
- When moving the Beverage Centre, be careful not to roll over or damage the power cord.
- Never clean Beverage Centre parts with flammable fluids. These fumes can create a fire hazard or explosion. And do not store or use gasoline or other flammable vapour and liquids in the vicinity of this or any other appliance. The fumes can create a fire hazard or explosion.
- Do not attempt to repair or replace any part of your Beverage Centre unless it is specifically recommended in this manual. All other servicing should be referred to a qualified technician.
- An empty Beverage Centre can be dangerous to children. Remove any latches, lids, locks, and/or doors from unused or discarded Beverage Centres to prevent child entrapment and suffocation. Never allow children to operate, play with or crawl inside this Beverage Centre.

1. This appliance is not intended for use by persons (including children) with reduced physical, sensory or mental capabilities, or lack of experience and knowledge, unless they have been given supervision or instruction concerning use of the appliance by a person responsible for their safety.
2. Children should be supervised to ensure that they do not play with the appliance.
3. This appliance can be used by children aged from 8 years and above and persons with reduced physical, sensory or mental capabilities or lack of experience and knowledge if they have been given supervision or instruction concerning use of the appliance in a safe way and understand the hazards involved. Children shall not play with the appliance. Cleaning and user maintenance shall not be made by children without supervision.
4. If the supply cord is damaged, it must be replaced by the manufacturer, its service agent or similarly qualified persons in order to avoid a hazard.
5. To avoid a hazard due to instability of the appliance, it must be fixed in accordance with the instructions.
6. When positioning the appliance, ensure the supply cord is not trapped or damaged.
7. Do not locate multiple portable socket-outlets or portable power supplies at the rear of the appliance.
8. Keep ventilation openings, in the appliance enclosure or in the built-in structure, clear of obstruction.
9. Do not use mechanical devices or other means to accelerate the defrosting process,other than those recommended by the manufacturer.
10. Do not damage the refrigerant circuit.
11. Do not use electrical appliances inside the drink storage compartments of the appliance, unless they are of the type recommended by the manufacturer.
12. Do not store explosive substances such as aerosol cans with a flammable propellant in this appliance.
13. Domestic use only: This appliance is intended for indoor household use only. It is not intended for commercial, industrial

or outdoor use. It is not intended for use in a recreational vehicle.

14. Do not use this appliance for anything other than its intended purpose. Other uses are not recommended and may cause fire, electric shock or personal injury.

15. To avoid contamination of drink, please respect the following instructions:

    – Opening the door for long periods can cause a significant increase of the temperature in the compartments of the appliance.

    – Clean regularly surfaces that can come in contact with drink and accessible drainage systems.

    – Clean water tanks if they have not been used for 48 h, flush the water system connected to a water supply if water has not been drawn for 5 days.

    – If the refrigerating appliance is left empty for long periods, switch off, defrost, clean, dry, and leave the door open to prevent mould developing within the appliance.



WARNING: Risk of fire / flammable materials

The coolant circuit of this unit contains the refrigerant Isobutane (R600a), a natural gas that-is flammable and of high environmental compatibility. Make sure no parts of the coolant circuit get damaged-during transport and installation of the appliance.

WARNING: When positioning the appliance, ensure the supply cord is not trapped or damaged.

WARNING: Do not locate multiple portable socket-outlets or portable power supplies at the rear of the appliance.

Warning

- Do not use this Beverage Centre for other than its intended purpose. For indoor, household use only.
- Move this Beverage Centre by 2 people. Failure to do so can result in injury.
- Place this Beverage Centre in a well-ventilated area with temperatures above 15°C (60°F) and below 32°C (90°F).
- To ensure proper ventilation for your Beverage Centre, the front of Beverage Centre must be completely unobstructed.
- This Beverage Centre must be installed in an area away from wind, rain, water spray or drips.
- The Beverage Centre should not be located next to ovens, grills or other sources of high heat.
- Do not kink or pinch the power supply cord of Beverage Centre.
- It is important for the Beverage Centre to be levelled in order to work properly. You may need to make several adjustments to level it.
- This Beverage Centre is designed for storing and cooling beverages. Do not store perishable food or medical products inside Beverage Centre.
- When disposing of refrigeration Beverage Centres, special handling is often required. It is the consumer's responsibility to comply with federal and local regulations when disposing of this product.
- **WARNING:** Risk of child entrapment and suffocation. Before you throw away this or an old cooler, remove the door. Leave the shelves in place, so that children may not easily climb inside.

Flammable Refrigerant Gas

DANGER - Risk of fire or explosion. Flammable refrigerant used.

DO NOT use mechanical devices to defrost refrigerator.
DO NOT puncture refrigerant tubing.

DANGER - Risk of fire or explosion. Flammable refrigerant used. To be repaired only by trained service personnel.

DO NOT puncture refrigerant tubing.

CAUTION - Risk of fire or explosion. Flammable refrigerant used. Consult repair manual / owner's guide before attempting to service this product. All safety precautions must be followed.

CAUTION - Risk of fire or explosion. Dispose of property in accordance with federal or local regulations. Flammable refrigerant used.

CAUTION - Risk of fire or explosion due to puncture of refrigerant tubing. Follow handling instructions carefully. Flammable refrigerant used.

CAUTION - To prevent a child from being entrapped, keep out of reach of children and not in the vicinity of Beverage Centre.

Your Beverage Centre

Components, Parts and Accessories

Model: CBC86B

A.	Top Hinge	D.	Glass Door
B.	Control Panel	E.	Levelling Legs
C.	4 × Wire Shelves		

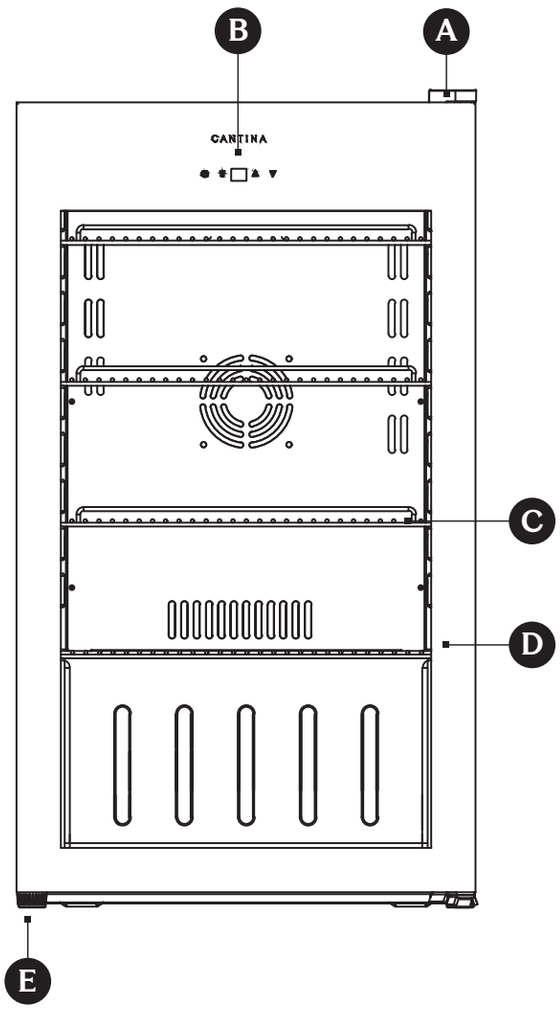

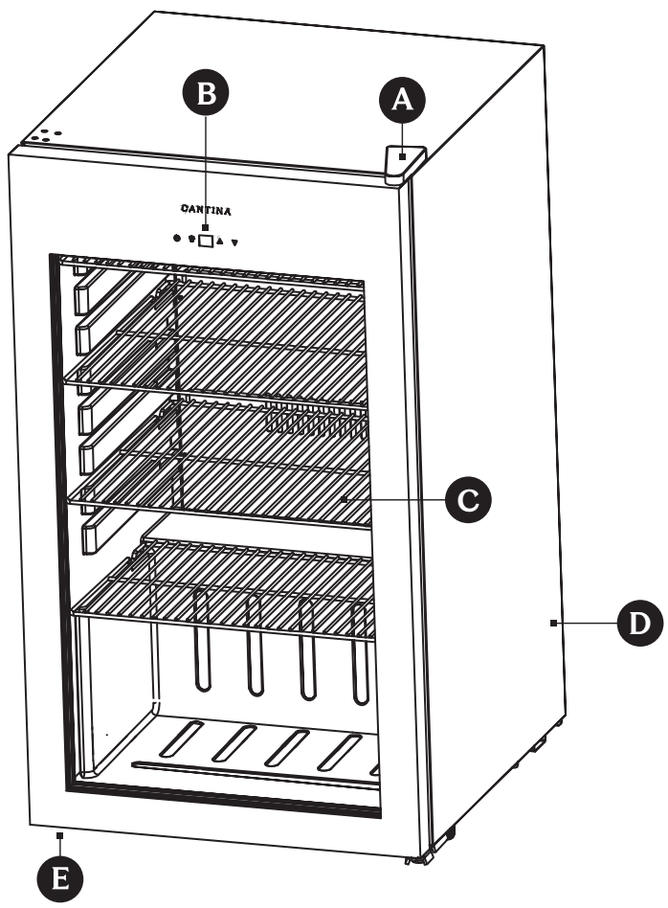

Installation Instructions

Before Using Your Beverage Centre

- Remove the exterior and interior packaging.
- Check to be sure you have all of the following parts
  - Shelves
  - Instruction Manual
- **IMPORTANT**: Before connecting this Beverage Centre to a power source, let it stand upright for approximately **24 hours**. This will reduce the possibility of a malfunction in the cooling system from handling during transportation.
- Clean the interior surface with lukewarm water using a soft cloth.

To Install Your Beverage Centre

- This Beverage Centre is designed for free standing or built-in (fully recessed) installation.
- Place your Beverage Centre on a solid and level floor that is strong enough to support it when it is fully loaded. This will ensure a vibration-free and noise-free operation. Adjust the levelling legs in and out to stabilize Beverage Centre horizontally. If the legs are not properly adjusted, Beverage Centre may be unstable and result in excess noise or vibration.
- Locate the Beverage Centre away from direct sunlight and sources of heat (stove, heater, radiator, etc.). Direct sunlight may affect the acrylic coating and heat sources may increase electrical consumption. Extremely cold ambient temperatures may also cause Beverage Centre not to perform properly.
- It is not advisable to install this cooler in moist areas or directly adjacent to a kitchen sink, as moisture could cause premature corrosion to the components of your new cooler.
- It is recommended you install the Beverage Centre in a place with temperatures **above 15°C(60°F) and below 32°C (90°F)** , and humidity is under 60%. If the ambient temperature is above or below recommended temperatures, the performance of the Centre may be affected. Placing your cooler in extremely cold or hot conditions may cause interior temperatures to fluctuate, and the temperature range of 1-18°C may not be reached.
- Connect the Beverage Centre to an exclusive, properly grounded, standard electrical supply **(220V /50Hz)**, in accordance with the National Electrical Code and local codes and ordinances. Any questions concerning power and/or grounding should be directed toward a certified electrician or an authorized products service center.

Space Requirement

- Ensure that there is enough space for the door to open
- Ensure that air can circulate freely around the back of the cabinet, this is to cool the compressor and condenser. Allow at least 50mm clearance at the top, rear and both sides of the unit

Electrical Connection

Warning: Improper use of the grounded plug can result in the risk of electrical shock. If the power cord is damaged, have it replaced by an authorized service centre.

- The Beverage Centre should always be plugged into its own individual electrical outlet which has a voltage rating that matches the rating label on the Beverage Centre. This provides the best performance and also prevents overloading house wiring circuits that could cause a fire hazard from overheated.
- Do not under any circumstances cut or remove the third ground prong from the power cord supplied.
- Do not use an extension cord or adapter plug. However, if you must use an extension cord, it is absolutely necessary that it be a UL-listed, 3-wire grounding type Beverage Centre extension cord having a grounding type plug and outlet and that the electrical rating of the cord is 10 amperes (minimum) and 220 volts.
- Do not use a cord that shows cracks or abrasion damage along its length or at either end.
- If the Beverage Centre is going to be used in an area that is prone to power surges/outages, it is suggested that you use a power surge protector. The surge protector that you select must have a surge block high enough to protect the Beverage Centre it is connected to. Damages due to power surges are not considered a manufacturer covered defect and will void your product warranty.

Operation Instructions

Controls

After plugging the beverage Centre into a wall outlet, Beverage Centre would turn on automatically and the LED screen would show the temperature inside of Beverage Centre. After setting your desired serving temperature, allow Beverage Centre to cool down for **3 to 4 hours** before placing beverage bottles in the Beverage Centre.



Temperature setting range: (1-18°C)

	Touch the power button to turn on the appliance. Press power button for 3 seconds to turn off the appliance.
	Touch the button to turn ON/OFF the interior LED lighting.
	Touch the button to increase or decrease the temperature in one degree.

Arranging our Beverage Centre

Many cans and bottles may differ in size and dimensions. As such the actual number of beverage you may be able to store may vary.

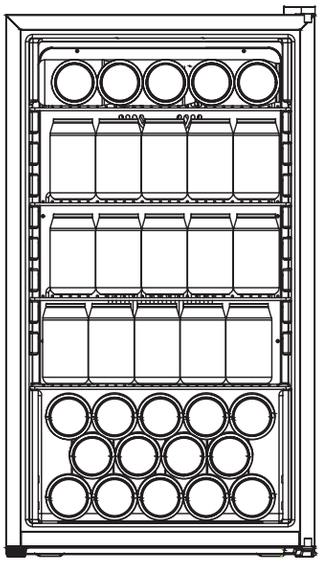

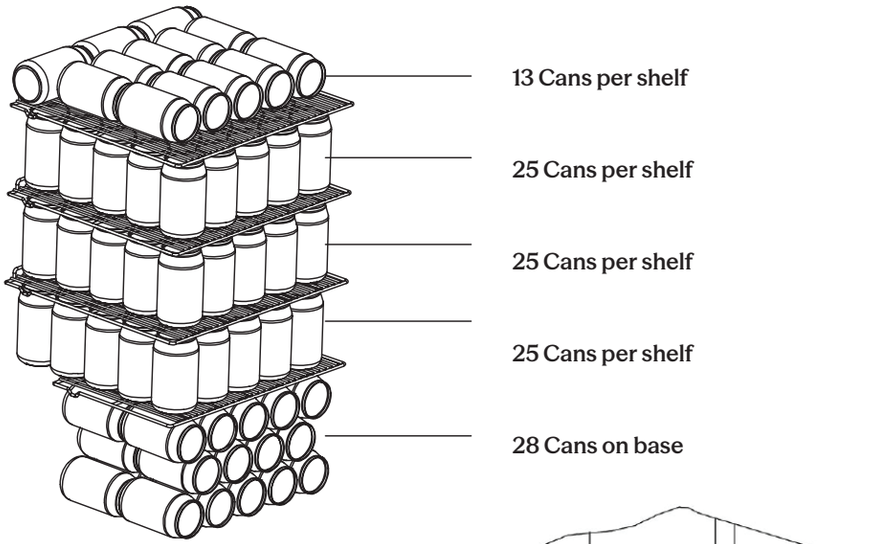

Shelves

To remove the shelves from the track, as shown in figure.

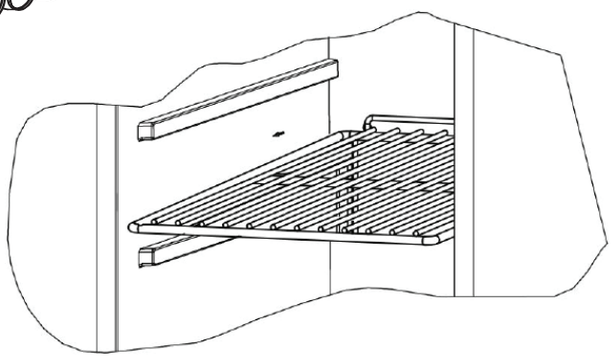

Care & Maintenance

Cleaning Your Beverage Centre

IMPORTANT: Always unplug Beverage Centre before cleaning or performing maintenance. Never use harsh cleansers or scouring pads to clean any part of Beverage Centre.

- Turn off the power, unplug the Beverage Centre, and remove all items including shelves.
- Wash the inside surfaces with warm water and baking soda solution. The solution should be about 2 tablespoons of baking soda to a quart of water.
- Wash the shelves with a mild detergent solution.
- Wring excess water out of the sponge or cloth when cleaning the area near the controls, or any electrical parts.
- Wash the outside cabinet with warm water and a mild liquid detergent. Rinse well and wipe dry with a clean soft cloth. Do not use steel wool or steel brush to rub the stainless steel, which will contaminate the stainless steel with steel particles and rusting may occur.

Power Failure

Most power failures are corrected within a few hours and should not affect the temperature of your Beverage Centre. If the power is off for an extended period of time, proper steps should be taken to protect your contents.

Vacation Time

Leave the Beverage Centre operating during vacations of less than three weeks. For periods longer than this, turn the Beverage Centre off and leave the door slightly ajar to prevent odor from building inside the Beverage Centre.

Moving Your Beverage Centre

- Remove all items (bottles) from Beverage Centre;
- Securely tape down any loose items, such as shelves, inside Beverage Centre.
- Turn the adjustable leg up to the base to avoid damage.
- Tape the door shut.
- Ensure that the Beverage Centre stays securely in the upright position during transportation. Protect the outside of the Beverage Centre with a blanket or a similar item.

Energy Saving Tips

- Beverage Centre should be located in the coolest area of the room away from heat sources or direct sunlight.
- Ensure that Beverage Centre is adequately ventilated. Never cover air vents.
- Only open Beverage Centre door for as long as necessary. Frequent opening of the door will affect internal temperature.

Troubleshooting Guide

Problem	Possible Cause	Solution
The Beverage Centre does not run.	The Beverage Centre may not be plugged in, or plug may be loose.	Ensure the Beverage Centre has been plugged in properly.
	The Beverage Centre is turned off.	Press ⏻ to turn on Beverage Centre.
	House fuse blown or tripped circuit breaker.	Check/replace fuse. Reset circuit breaker.
The Beverage Centre is not cold enough.	External environment may require a higher setting.	Set a colder setting. Allow several hours for the temperature to stabilise.
	The Beverage Centre has recently been disconnected for a period of time.	It takes 3-4 hours for the Beverage Centre to cool down completely.
	Prolonged or frequent door openings.	Open the door less often.
	The door is not closed completely.	Close the door properly.
	The door gasket does not seal properly.	Check the door gasket. Clean or change gasket if necessary.
The compressor turns on and off frequently.	The room temperature is hotter than normal.	It's normal for the Beverage Centre to work harder under these conditions.
	A large amount of contents has been added to Beverage Centre.	A large amount of contents cause the Beverage Centre to run more until the desired temperature is reached.
	Prolonged or frequent door openings.	Open the door less often.
	The temperature has not been set correctly.	Press either △ or ▽ to check the set temperature, and set the temperature properly.
	The door is not closed completely.	Close the door properly.
	The door gasket does not seal properly.	Check the door gasket. Clean or change gasket if necessary.

Problem	Possible Cause	Solution
The light does not work.	Not plugged in.	Plug the cooler in.
	The circuit breaker tripped or a blown fuse.	Check the breaker and/or fuses.
	The light button is “OFF”.	Press  to turn the light ON.
Vibrations.	The cooler is not leveled.	Check to assure that the cooler is level.
	The bottles are vibrating.	Make sure the bottles don’t touch each others.
	There is an object under the cooler.	Remove the object under the cooler.
The cooler seems to make too much noise.	The cooler is not level.	Level the cooler
	Normal noise from the flow of the refrigerant	The rattling noise may come from the flow of the refrigerant, which is normal. As each cycle ends, you may hear gurgling sounds caused by the flow of refrigerant in your cooler. Contraction and expansion of the inside walls may cause popping and crackling noises.
The door will not close properly.	The cooler is not level.	Level the cooler.
	The door was reversed and not properly installed.	Re-install the door properly.
	The gasket is dirty.	Clean the door gasket.
	The shelves are out of position.	Place the shelves properly.
Moisture build up on interior or exterior of the Beverage cooler.	This is normal during high humidity periods.	Lower the room humidity.
	This is normal in high temperature environment.	Move the cooler to a cooler place, and avoid heat and sunlight.
	Prolonged or frequent door openings.	Open the door less often.
	The door does not seal completely.	Check door gaskets for proper seal.
Error Code: E1	Temperature sensor failure.	Contact the customer service

Technical Specifications

Product Specifications

Model	**CBC86B**
Capacity (330ml Cans)	116
Capacity (Litres)	78L
Installation	Freestanding
Dimensions (W × D × H mm)	445 × 480 × 795
Rated Voltage / Frequency	AC220V/50Hz
Climate Class	SN/N/ST
Rated Current	0.36A
Refrigerant	R600a
Max Noise Level:	40 dB(A)
Temperature Range:	1-18 °C.

The Net weight includes shelves and the Unit dimension is without handle on the door.

The manufacturer reserves all the rights to change the above parameters without prior notice. Please refer to the name plate of your appliance.

Loading capacity will vary in terms of different way of bottle arrangement or different can sizes.

Notes

Purchase Details

Attach your receipt to this page

For future reference, please record the following information which can be found on the rating plate and the date of purchase which can be found on your sales invoice.

Store Details

Store Name

Address

Telephone | Purchase Date

Product Details

Model No.

Serial No.

Warranty Information

WARRANTY TERMS AND CONDITIONS
BEVERAGE CENTRES

This document sets out the terms and conditions of the product warranties for Residentia Group Appliances. It is an important document. Please keep it with your proof of purchase documents in a safe place for future reference should you require service for your Appliance.

1. In this warranty
(a) 'acceptable quality' as referred to in clause 10 of this warranty has the same meaning referred to in the ACL;
(b) 'ACL' means Trade Practices Amendment (Australian Consumer Law) Act (No.2) 2010;
(c) 'Appliance' means any Residentia Group product purchased by you accompanied by this document;
(d) 'ASR' means Residentia Group authorised service representative;
(e) 'Residentia Group' means Residentia Group Pty Ltd of 165 Barkly Ave, Burnley VIC 3121, ACN 70 600 546 656 in respect of Appliances purchased in Australia;
(f) 'major failure' as referred to in clause 10 of this warranty has the same meaning referred to in the ACL and includes a situation when an Appliance cannot be repaired or it is uneconomic for Residentia Group, at its discretion, to repair an Appliance during the Warranty Period;
(g) 'Warranty Period' means:
    (i) where the Appliance is used for personal, domestic or household use (i.e. normal single family use) as set out in the instruction manual, the Appliance is warranted against manufacturing defects for 24 months, following the date of original purchase of the Appliance;
(h) 'you' means the purchaser of the Appliance not having purchased the Appliance for re-sale, and 'your' has a corresponding meaning.

2. This warranty only applies to Appliances purchased and used in Australia and is in addition to (and does not exclude, restrict, or modify in any way) any non-excludable statutory warranties in Australia.

3. During the Warranty Period Residentia Group or its ASR will, at no extra charge if your Appliance is readily accessible for service, without special equipment and subject to these terms and conditions, repair or replace any parts which it considers to be defective. Residentia Group or its ASR may use remanufactured parts to repair your Appliance. You agree that any replaced Appliances or parts become the property of Residentia Group. This warranty does not apply to light globes, batteries, seals, filters or similar perishable parts.

4. Parts and Appliances not supplied by Residentia Group are not covered by this warranty.

5. You will bear the cost of transportation, travel and delivery of the Appliance to and from Residentia Group or its ASR. If you reside outside of the service area, you will bear the cost of:
(a) travel of an authorised representative;
(b) transportation and delivery of the Appliance to and from Residentia Group or its ASR, in all instances, unless the Appliance is transported by Residentia Group or its ASR, the Appliance is transported at the owner's cost and risk while in transit to and from Residentia Group or its ASR.

6. Proof of purchase is required before you can make a claim under this warranty.

7. You may not make a claim under this warranty unless the defect claimed is due to faulty or defective parts or workmanship. Residentia Group is not liable in the following situations (which are not exhaustive):
(a) the Appliance is damaged by:
    (i) accident
    (ii) misuse or abuse, including failure to properly maintain or service
    (iii) normal wear and tear
    (iv) power surges, electrical storm damage or incorrect power supply
    (v) incomplete or improper installation
    (vi) incorrect, improper or inappropriate operation
    (vii) insect or vermin infestation
    (viii) failure to comply with any additional instructions supplied with the Appliance;
(b) the Appliance is modified without authority from Residentia Group in writing;
(c) the Appliance's serial number or warranty seal has been removed or defaced;
(d) the Appliance was serviced or repaired by anyone other than Residentia Group, an authorised repairer or ASR.

8. This warranty, the contract to which it relates and the relationship between you and Residentia Group are governed by the law applicable where the Appliance was purchased.

9. To the extent permitted by law, Residentia Group excludes all warranties and liabilities (other than as contained in this document) including liability for any loss or damage whether direct or indirect arising from your purchase, use or non use of the Appliance.

10. For Appliances and services provided by Residentia Group in Australia, the Appliances come with a guarantee by Residentia Group that cannot be excluded under the Australian Consumer Law. You are entitled to a replacement or refund for a major failure and for compensation for any other reasonably foreseeable loss or damage. You are also entitled to have the Appliance repaired or replaced if the Appliance fails to be of acceptable quality and the failure does not amount to a major failure. The benefits to you given by this warranty are in addition to your other rights and remedies under a law in relation to the Appliances or services to which the warranty relates.

11. At all times during the Warranty Period, Residentia Group shall, at its discretion, determine whether repair, replacement or refund will apply if an Appliance has a valid warranty claim applicable to it.

12. Missing parts are not covered by warranty. Residentia Group reserves the right to assess each request for missing parts in a case by case basis. Any parts that are not reported missing in the first week after purchase will not provide free of charge.

13. To enquire about claiming under this warranty, please follow these steps:
(a) carefully check the operating instructions, user manual and the terms of this warranty;
(b) have the model and serial number of the Appliance available;
(c) have the proof of purchase (e.g. an invoice) available;
(d) telephone the numbers shown below.

14. You accept that if you make a warranty claim, Residentia Group and its ASR may exchange information in relation to you, in order to enable Residentia Group to meet its obligations under this warranty.

IMPORTANT
Before calling for service, please ensure that the steps in point 13 have been followed.

Contact Service: Please call 1300 11 HELP (4357)

The Australian Consumer Law requires the inclusion of the following statement with this warranty:

Our goods come with guarantees that cannot be excluded under the Australian Consumer Law. You are entitled to a replacement or refund for a major failure and for compensation for any other reasonably foreseeable loss or damage. You are also entitled to have the goods repaired or replaced if the goods fail to be of acceptable quality and the failure does not amount to a major failure.

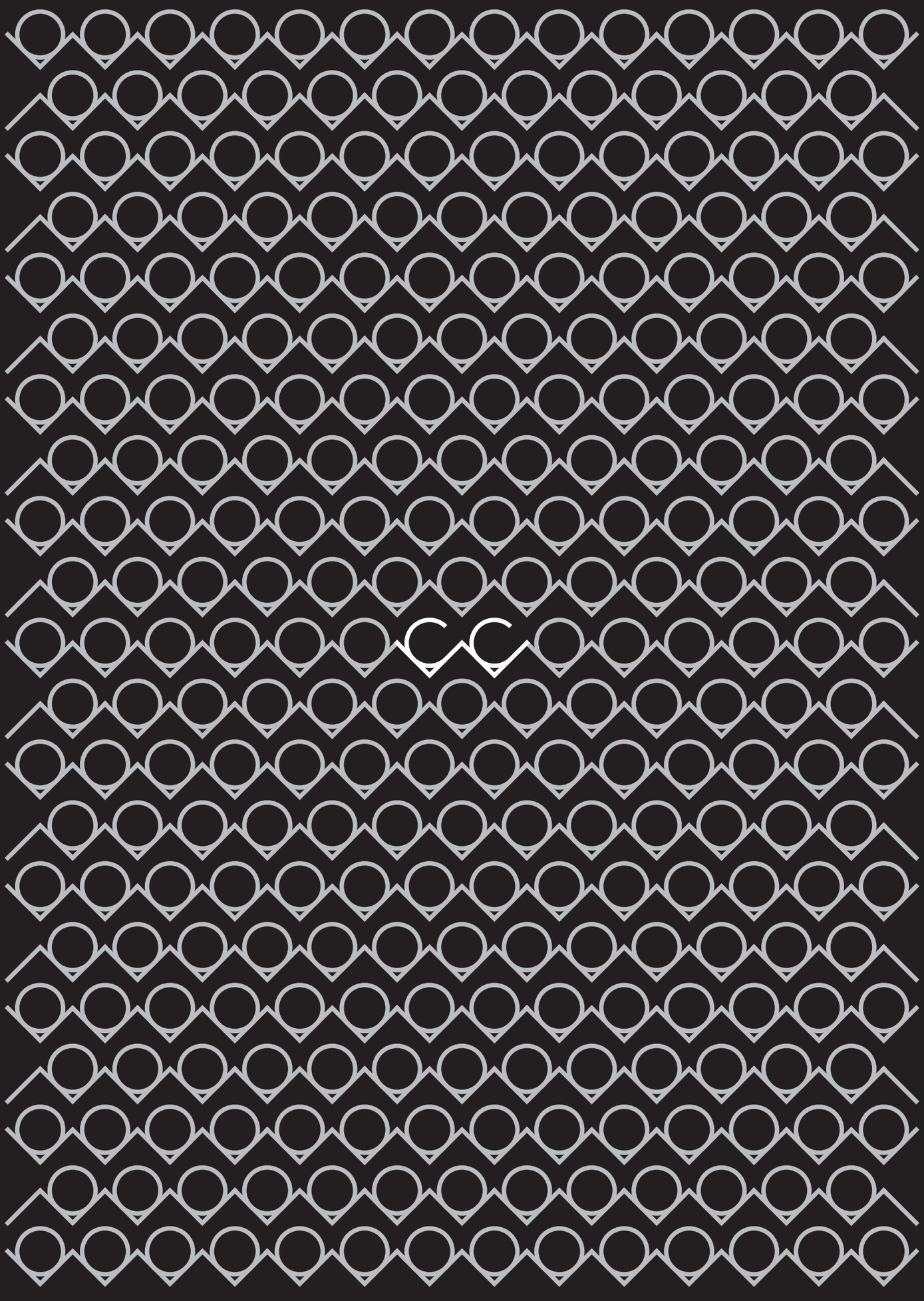

E2447