Code EV60M8SX – 60cm Electric Multifunction Oven

CONVENTIONAL
This conventional cooking method involves the heat emanating evenly from the lower and upper elements into the oven ensures even cooking of the lower and upper side of the food being cooked. This function is perfect for cakes, pastry, baked pasta, lasagne and pizza.

FULL GRILL
Full grill is the perfect option for quick grilling. Toast your favourite meals or finish off the tops of your recipes.

DEFROST
In defrost mode, no heating elements are used. Only the fan is activated to circulate air inside the oven for defrosting. It defrosts food up to 30% faster than traditional methods

THERMOWAVE FAN ASSISTED
This is the position where the heat is coming from the lower and upper heating elements and the heat is circulated into the oven by the fan motor and blades.

FEATURES:

- 9 multi-functions
  - + Oven Light
  - + Conventional
  - + Thermowave fan assisted
  - + Bottom element
  - + Fan forced
  - + Full grill
  - + Fan grill
  - + Defrost
  - + Top element & grill
- Fully programmed electronic touch control
- Slim design control panel with chrome push pull knobs
- Contained cavity cooling with tangential cooling fan
- Triple glazed removable inner glass
- Removable rack support
- Telescopic runner
- 2 * oven shelves & 1 baking tray
- Enamel oven interior
- Full stylish black glass

OVEN LIGHT
The oven light will automatically turn on once any function is selected, helps to monitor the progress of your cooking.

FAN FORCED COOKING
For the ultimate roast or perfect batch of pastries. The element surrounding the fan delivers even heat for even cooking results, approx. 180ºC - 200ºC is recommended

FAN GRILL
This function is perfect for fish, chicken Fillets or meat Cutlets. This Combination is exceptional for cooking meats such as poultry, game and roasts, making them crispy on the outside and tender in the middle.

BOTTOM ELEMENT
Great for pizza cooking, the bottom element creates the perfect cooking function for base cooked food.

TOP ELEMENT + GRILL ELEMENT
Grill or toast enough of those favourite after school snacks to feed an army with the top element function.
.

ELECTRICAL REQUIREMENTS:

This oven can be connected to a 15 AMP wiring connection.
For more information please refer to a qualified electrician.

POWER CONSUMPTION:
220-240v – 50/60Hz - 3.0Kw

OVEN VOLUME CAPACITY:
70 litres (gross) - 65 litres (net)

WEIGHT:
36.8kg (gross) - 33.3kg (net)

CLEANING AND MAINTENANCE
Easy clean **AAA** grade enamel interior.
Clean stainless steel using only recommended stainless steel cleaning products.
No abrasives, corrosive detergents, bleaches or acids not

PRODUCT DIMENSIONS

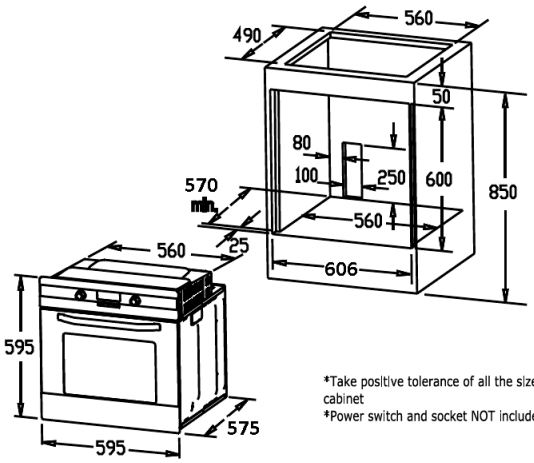

*Take positive tolerance of all the size in the cabinet
*Power switch and socket NOT included

Disclaimer: Please note that measurements and model appearances may change at any time. Euro Appliances reserve the right to change specifications without notice.

TWO YEAR WARRANTY