(1,1) -1- 599790H OB60&OB90 installA2 NZGB.indd 25/09/17 12:32 PM

MULTIFUNCTION OB60 OVENS

NZ AU GB IE

Important!

SAVE THESE INSTRUCTIONS

The models shown in this document may not be available in all markets and are subject to change at any time. For current details about model and specification availability in your country, please visit our local website listed at the end of this document or contact your local Fisher & Paykel dealer.

1 SAFETY AND WARNINGS

⚠ WARNING!

Electrical shock hazard

Always disconnect the appliance from the mains power supply before carrying out any maintenance or repairs. Connection to a good earth wiring system is essential and mandatory. Alterations to the domestic wiring system must only be made by a qualified electrician.

Failure to follow this advice may result in electrical shock or death.

⚠ WARNING!

Fire hazard

Do not use adapters, reducers, or branching devices to connect this appliance to the mains power supply.

Failure to follow this advice may result

⚠ WARNING!

Cut hazard

Take care - panel edges are sharp.

Failure to use caution could result in injury or cuts.

Important safety instructions!

- ***To avoid hazard, follow these instructions carefully before installing or using this appliance.***
- ***Please make this information available to the person installing the appliance - doing so could reduce your installation costs.***
- ***This appliance must be installed and connected to the mains power supply only by a suitably qualified person according to these installation instructions and in compliance with any applicable local building and electricity regulations. Failure to install the appliance correctly could invalidate any warranty or liability claims.***
- ***If the power supply cable is damaged, it must be replaced by the manufacturer, its service agent or similarly qualified person in order to avoid a hazard.***

3 PRIOR TO INSTALLATION

Before you install the oven, make sure that

- the benchtop and oven cavity are square and level, and are the required dimensions
- the installation will comply with all clearance requirements and applicable standards and regulations
- a suitable isolating switch providing full disconnection from the mains power supply (under overvoltage category III conditions) is incorporated in the permanent wiring, mounted and positioned to comply with the local wiring rules and regulations. The isolating switch must be of an approved type and provide a 3 mm air gap contact separation in all poles (or in all active [phase] conductors if the local wiring rules allow for this variation of the requirements).
- the isolating switch will be easily accessible to the customer with the oven installed
- there is at least 1.5 m (and not more than 2 m) free length of power supply cable within the cavity for ease of installation and servicing
- the oven connection socket (if fitted) is outside the cavity if the oven is flush to the rear wall
- the oven will rest on a surface that can support its weight
- the height from the floor suits the customer
- you consult local building authorities and by-laws if in doubt regarding installation.

Important!

Some environmental factors and cooking habits can cause condensation in and around the oven during use. To protect surrounding cabinetry from possible damage caused by frequent or excessive condensation, we recommend moisture-proofing the oven cavity.

4 UNPACKING THE OVEN

Important!

Do not lift the oven by the door handle.

- Remove all packaging and dispose of it responsibly. Recycle items that you can.
- Place the unpacked oven onto wooden blocks or similar supports to prevent damaging the lower trim. You may remove the feet, but ensure the oven does not sit on the lower trim

Important!

The lower trim ensures correct air circulation and allows the door to open and close without obstruction. The manufacturer does not accept any responsibility for damage resulting from incorrect installation.

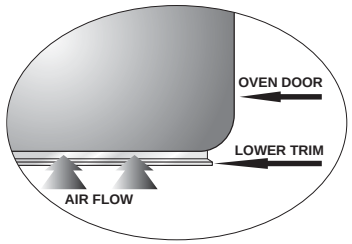

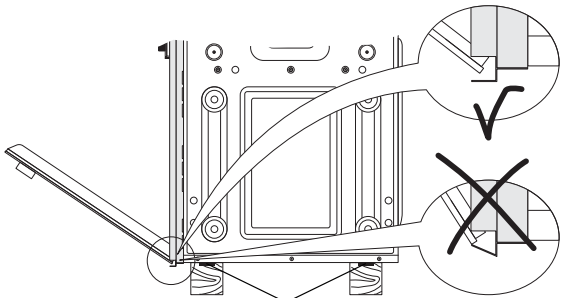

5 ELECTRICAL CONNECTION

Important!

- *This oven must be connected to the mains power supply only by a suitably qualified person.*
- *This oven must be earthed.*

Before connecting the oven to the mains power supply, check that

- the domestic wiring system is suitable for the power drawn by the oven (as specified on the rating plate)
- the voltage corresponds to the value given on the rating plate.

OB60S & OB60N MODELS

Model code	Power	Voltage
OB60SLC...	2350-2550 W	230 - 240 V~
OB60SLM...	3070 W	220-240 V~
OB60SCE...	3070 W	220-240 V~
OB60SCM...	3070 W	220-240 V~
OB60SCT...	3600 W	230 V~
OB60SDT...	3600 W	230 V~
OB60S9D...	3400 W	220-240 V~
OB60SV...	3070 W	220-240 V~
OB60NL...	2050 W	220-240 V~
OB60NC...	2800 W	220-240 V~
OB60ND...	2800 W	220-240 V~

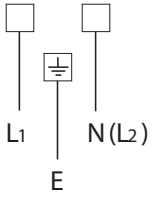

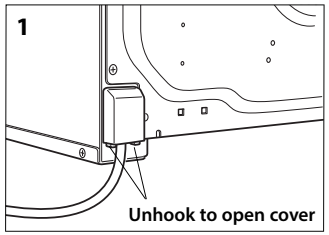

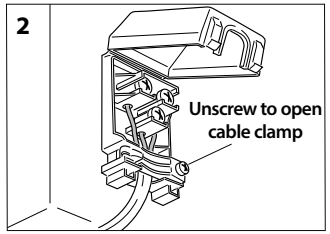

OB60B & OB60D MODELS

Model code	Power	Voltage
OB60BC...	5800 W	220 - 240 V~
OB60BD...	5800 W	220 - 240 V~
OB60B77C...	5850 W	220 - 240 V~
OB60B77D...	5850 W	220 - 240 V~
OB60DD...	6120 W	220 - 240 V~

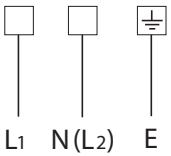

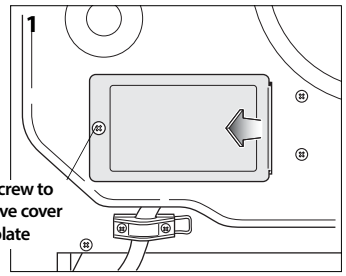

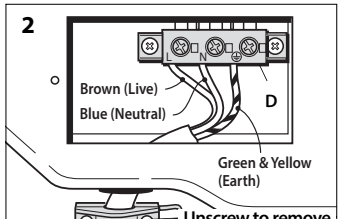

(3,1) -1- 599790H OB60&OB90 installA2 NZGB.indd 25/09/17 12:32 PM

2 PRODUCT & CABINETRY DIMENSIONS

OB60S & OB60N MODELS

Installation diagrams for illustration purposes only

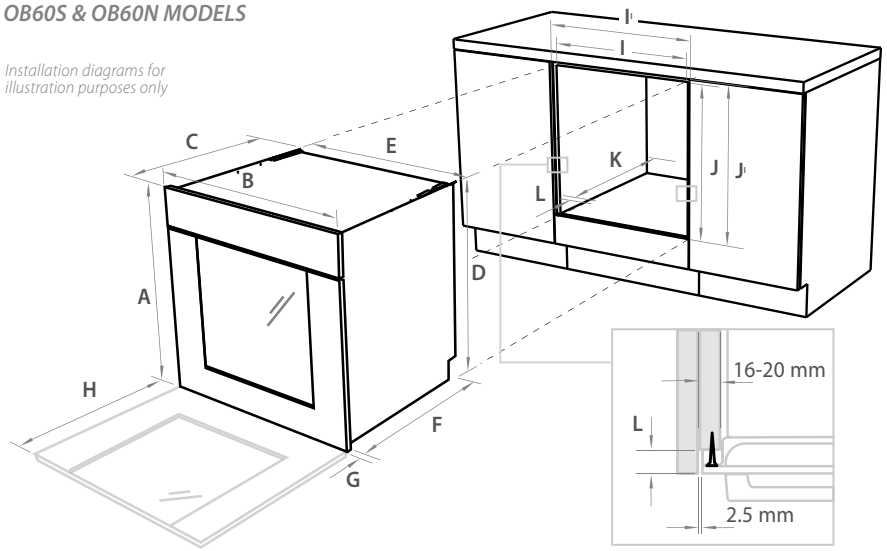

OB60B & OB60D MODELS

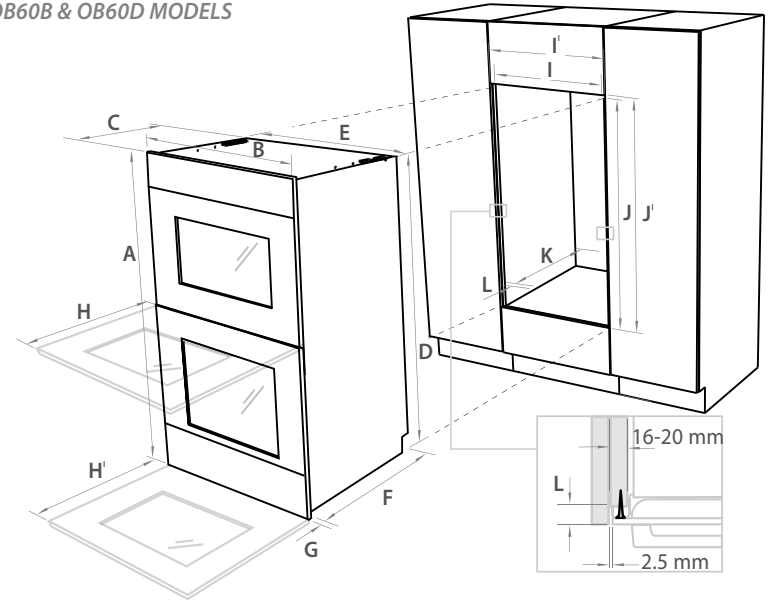

Product dimensions (mm)

		OB60S	OB60N
A	overall height* of product	597	450**
B	overall width of product	595	595
C	overall depth of product (excluding handle and knobs)	565	554
D	height of chassis	582	436
E	width of chassis	556	536
F	depth of chassis	545	534
G	depth of oven frame and control panel (=distance between front of chassis and front of oven door, excl. knobs)	20	20
H	depth of oven door when fully open (measured from front of control panel)	435	289
I	minimum inside width of cavity	560	560
I'	overall width of cavity	600	600
J	inside height of cavity	585	440**
J'	overall height of cavity	600	455**
K	minimum inside depth of cavity	550	550
L	flush fitting cabinetry clearance	20	20

Note: If installing a cooktop above the oven, ensure adequate clearance is provided for the cooktop as per the cooktop manufacturer's instructions.

*All height measurements include mounted feet.

Product dimensions (mm)

		OB60B	OB60D
A	overall height* of product	888	1077
B	overall width of product	595	595
C	overall depth of product (excluding handle and knobs)	565	565
D	height of chassis	874	1057
E	width of chassis	556	556
F	depth of chassis	545	545
G	depth of oven frame and control panel (=distance between front of chassis and front of oven door, excl. knobs)	20	20
H	depth of upper oven door when fully open (measured from front of control panel)	261	435
H'	depth of lower oven door when fully open (measured from front of control panel)	435	450
I	minimum inside width of cavity	560	560
I'	overall width of cavity	600	600
J	inside height of cavity	877	1065
J'	overall height of cavity	893	1082
K	minimum inside depth of cavity	550	550
L	flush fitting cabinetry clearance	20	20

*All height measurements include mounted feet.

FEET

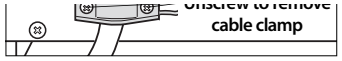

6 SECURING OVEN TO CABINETRY

1 Position the oven in the prepared cavity.

Important!

Do not lift the oven by the door handle.

2 Open the oven door fully.

3 Use the supplied screws to secure the oven to the cabinetry.

Important!

- ***Do not over-tighten the screws.***
- ***Do not seal the oven into the cabinetry with silicone or glue. This makes future servicing difficult. Fisher & Paykel will not cover the costs of removing the oven, or of damage caused by this removal.***

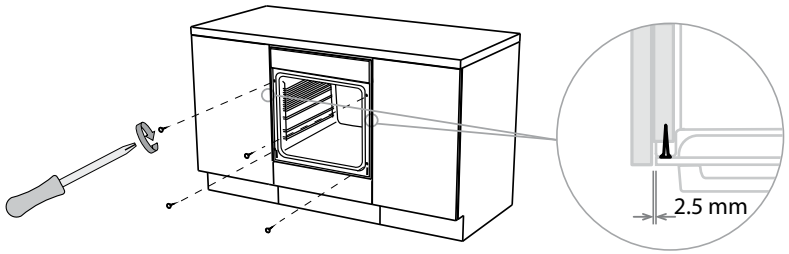

7 FINAL CHECKLIST

✓

- ☐ Make sure the oven is level and securely fitted to the cabinetry and the oven door opens and closes freely.
- ☐ Make sure all the internal packaging has been removed from the oven cavity.
- ☐ Make sure all oven vents and openings are clear and are free of any obstruction/damage.
- ☐ Check the lower trim is still undamaged - open the oven door slowly to its fully open position and check if there is adequate clearance between the bottom of the door and the lower trim. This is to ensure correct air circulation. Should the lower trim become damaged, straighten the trim and ensure the oven door opens fully without obstruction.
- ☐ Check that the power supply cable does not touch any metal parts that can become hot during use.
- ☐ Make sure that the isolating switch is easily accessible by the customer.
- ☐ Turn the power to the oven on. On some models, the display should light up and show 0:00.
- ☐ Advise the customer to follow the instructions in their user guide in section 'First use'.

(3,2) -1- 599790H OB60&OB90 installA2 NZGB.indd 25/09/17 12:32 PM

** If fitting the lower trim extension kit, the overall height of product (A) increases by 25 mm (to 475 mm).
The height of the cavity (J and Ji) therefore needs to be increased by 25 mm also (to 465 mm and 480 mm respectively).

(2,3) -1- 599790H OB60&OB90 installA2 NZGB.indd 25/09/17 12:32 PM

www.fisherpaykel.com F&P Italy Part No. 1103268-ß8 599790H NZ AU GB IE 10.17

(3,3) -1- 599790H OB60&OB90 installA2 NZGB.indd 25/09/17 12:32 PM

9 SECURE THE OVEN TO THE CABINETRY

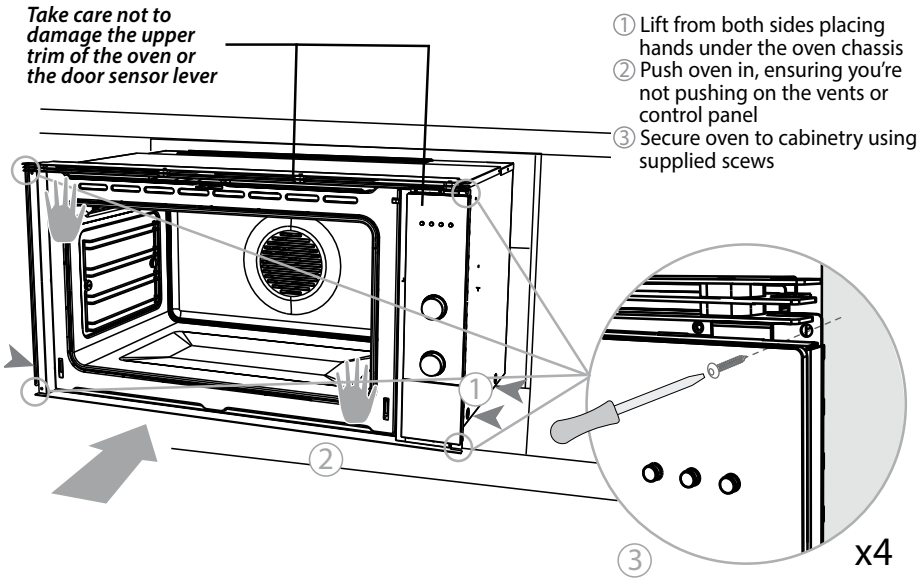

10 FINAL CHECKLIST

✓

- ☐ Make sure the appliance is level and securely fitted to the cabinetry and the oven door opens and closes freely.
- ☐ Make sure all the internal packaging has been removed from the oven cavity.
- ☐ Make sure all oven vents and openings are clear and are free of any obstruction/damage.

Important!

Failure to make sure all oven vents are unobstructed may result in poor product performance.

- ☐ Make sure that the isolating switch is accessible by the customer.
- ☐ Turn the power to the oven on. The display should light up and show 0:00.
- ☐ Turn the oven function dial to 'Bake'. Air should blow out of the vent at the top of the oven. Inside the oven cavity, both oven lights should come on. After five minutes, open the oven door: the air inside should feel warm.
- ☐ Turn the oven function dial back to OFF.

11 REFIT THE DOOR

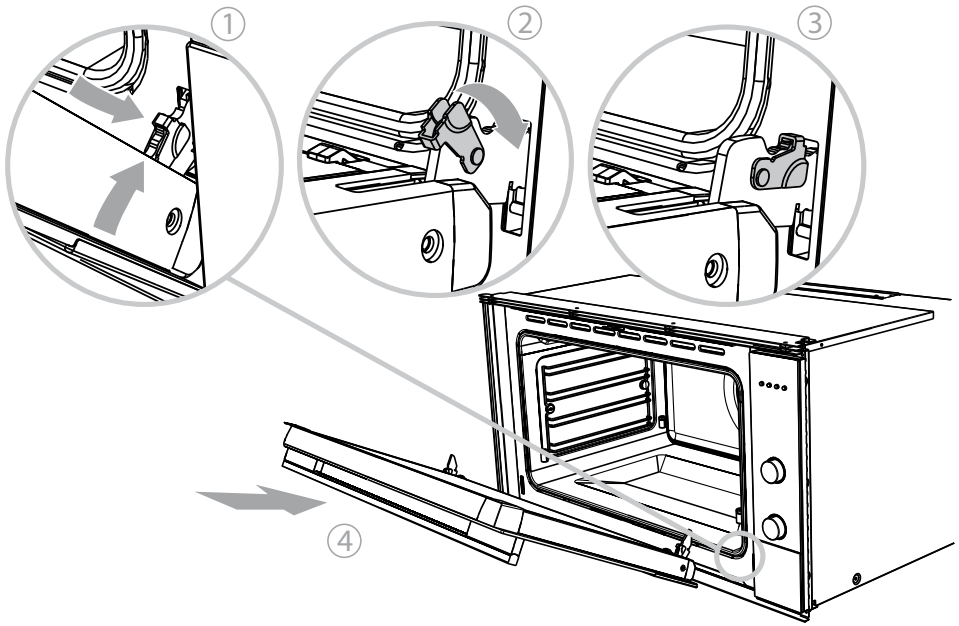

11 TROUBLESHOOTING

If the appliance is not functioning correctly after installation, check the following:

- ☐ Check that the circuit breaker has not tripped or the fuse blown.
- ☐ Make sure that the electrical connections have been correctly made.
- ☐ Make sure that power is being supplied to the oven.
- ☐ Make sure the voltage is correct across all phases.
- ☐ If a problem occurs, consult the Troubleshooting section of the User Guide.
- ☐ If after checking these points you still need assistance or parts, please refer to the Service & Warranty book for warranty details and your nearest Authorised Repairer, or contact us through our local website, listed below.

(1,1) -2- 599790H OB60&OB90 installA2 NZGB.indd 25/09/17 12:33 PM

- the oven door can open fully without obstruction.
- a suitable isolating switch providing full disconnection from the mains power supply (under overvoltage category III conditions) is incorporated in the permanent wiring, mounted and positioned to comply with the local wiring rules and regulations. The isolating switch must be of an approved type and provide a 3 mm air gap contact separation in all poles (or in all active [phase] conductors if the local wiring rules allow for this variation of the requirements).
- the electrician provides sufficient free length of power supply cable to reach from the bottom rear of the cavity to at least 1.5 metres in front of the bottom edge of the opening. The cable may enter the cavity from the side, top or bottom, but top entry must be at the rear of the cavity.

2 PRODUCT DIMENSIONS

Installation diagrams for illustration purposes only

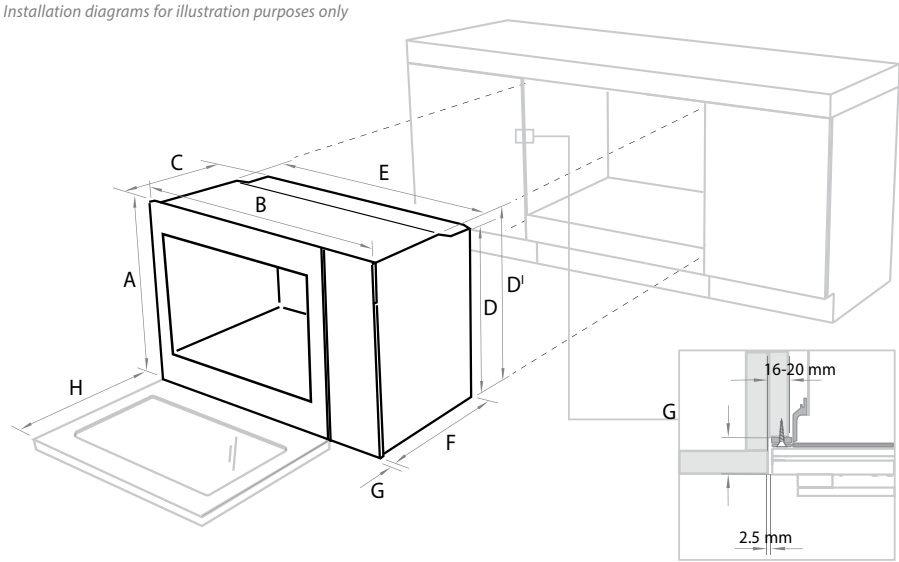

Product dimensions (mm)

		OB90 models
A	overall height of product (including upper and lower vents)	478
B	overall width of product	895
C	overall depth of product (excludes handle and dials)	564
D	height of chassis at the rear	464
D'	overall height of chassis	468
E	maximum width of chassis	853
F	depth of chassis	544
G	depth of oven frame and control panel (excludes handle and dials)	20
H	depth of oven door (open) (measured from front of door)	418

Note: If installing a cooktop above the oven, ensure adequate clearance is provided for the cooktop as per the cooktop manufacturer's instructions.

- Make sure that the isolating switch will be easily accessible by the customer.
- Do not stand on the door, or place heavy objects on it.
- Do not lift the oven by the door handle.
- Take extra care not to damage the lower trim of the oven. We suggest you place the unpacked oven onto wooden blocks or similiar supports.
- When handling the oven, take care not to damage the door sensor lever (near the top right corner of the oven seal).
- Use easy-to-clean finishes for the wall surfaces surrounding the oven, so that cooking fume staining resulting from using the oven is easy to remove.

3 CABINETRY DIMENSIONS

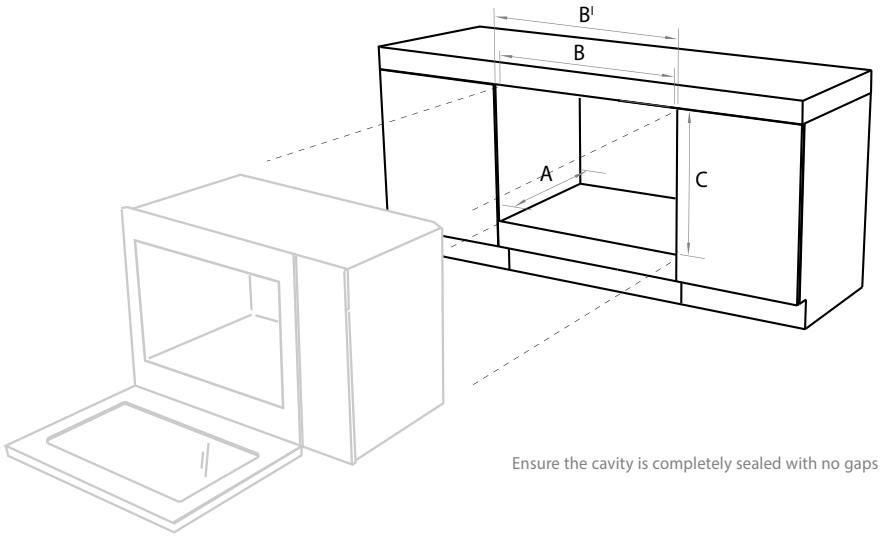

Cabinetry dimensions (mm)

		OB90 models
A	minimum inside depth of cavity	550
B	minimum inside width of cavity	860
B'	overall width of cabinetry	900
C	height of cavity	480

(2,1) -2- 599790H OB60&OB90 installA2 NZGB.indd 25/09/17 12:33 PM

(3,1) -2- 599790H OB60&OB90 installA2 NZGB.indd 25/09/17 12:33 PM

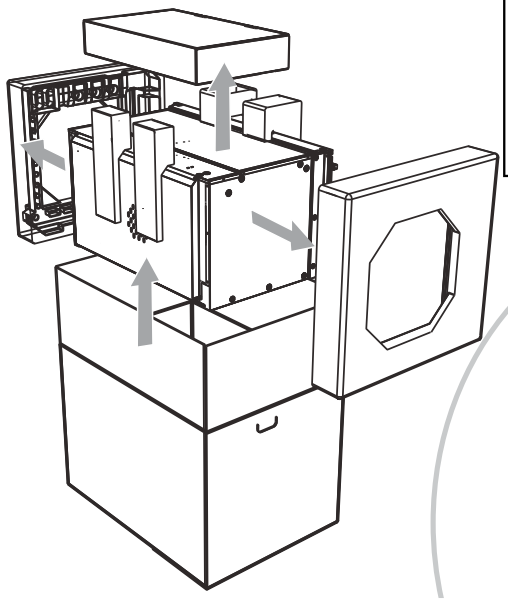

⚠ WARNING!

124 lb
56 kg

Very Heavy

Do not attempt to lift this product unassisted.

Lifting unassisted may cause serious injury.

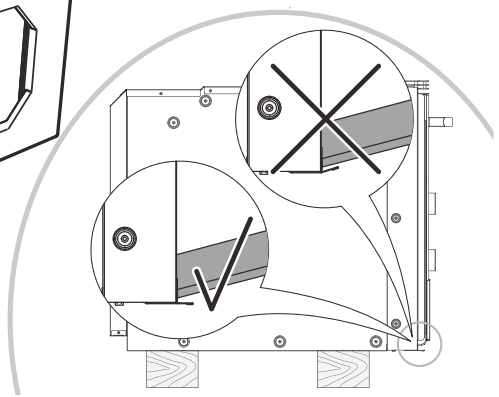

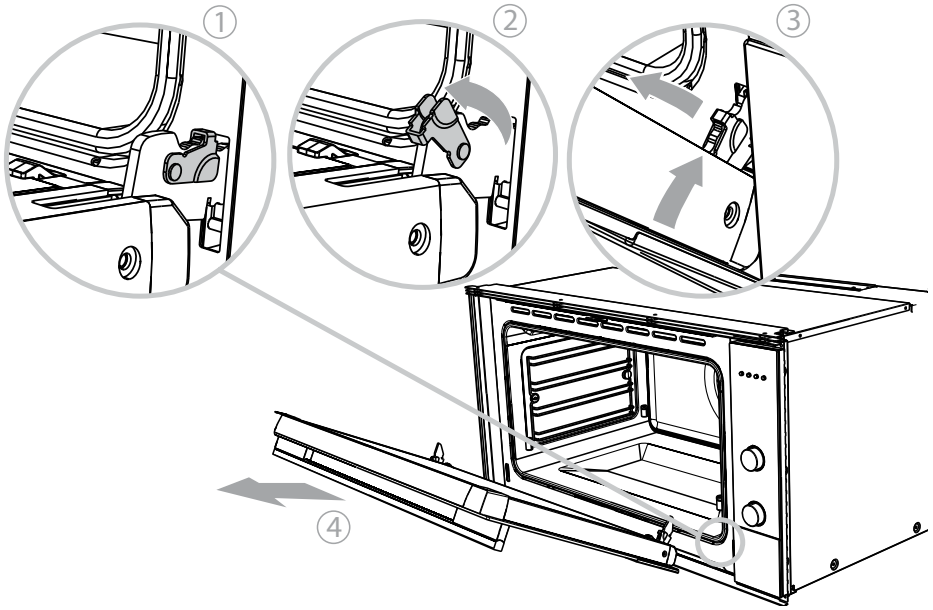

6 ELECTRICAL CONNECTION

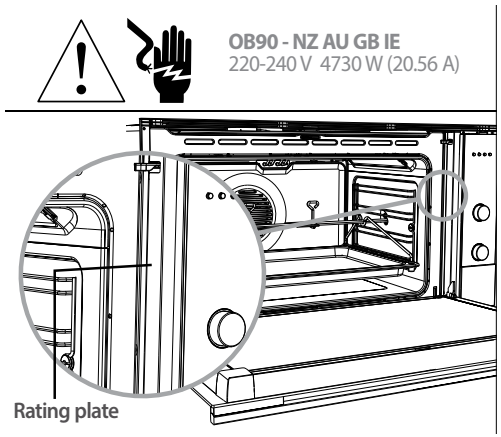

Connecting the oven to the mains power supply

Important!

- ***This oven must be connected to the mains power supply only by a suitably qualified person.***
- ***This oven must be earthed.***

Before connecting the oven to the mains power supply, check that

- the domestic wiring system is suitable for the power drawn by the oven (as specified on the rating plate)
- the voltage corresponds to the value given on the rating plate.

We recommend that the outlet for the power supply cable is located in the right rear corner of the cabinet cavity. This allows the power supply cable to sit inside the right rear of the oven and prevents it being jammed between the cabinet wall and the rear of the oven.

7 HARD WIRING THE OVEN

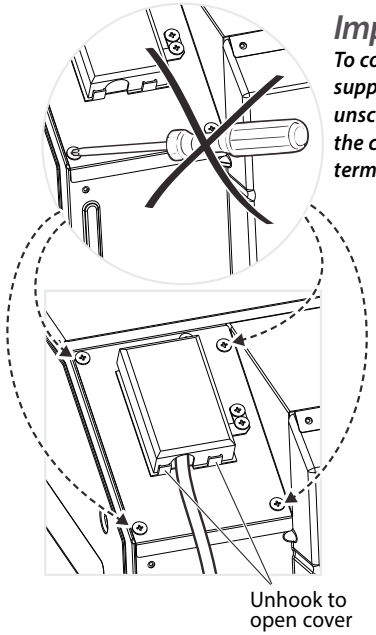

Important!

To connect the power supply cable DO NOT unscrew the screws fixing the cover plate behind the terminal block.

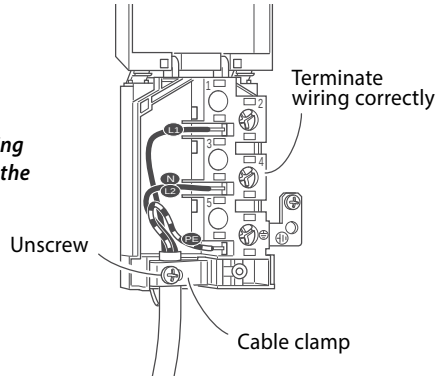

220-240 V ac

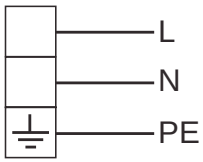

8 SECURE THE OVEN TO THE CABINETRY

9 REFIT THE DOOR

(1.2) -2- 599790H OB60&OB90 installA2 NZGB.indd 25/09/17 12:33 PM

Important!

SAVE THESE INSTRUCTIONS

The models shown in this document may not be available in all markets and are subject to change at any time. For current details about model and specification availability in your country, please visit our local website listed at the end of this document or contact your local Fisher & Paykel dealer.

1 SAFETY AND WARNINGS

⚠ WARNING!

Electrical shock hazard

Always disconnect the appliance from the mains power supply before carrying out any maintenance or repairs. Connection to a good earth wiring system is essential and mandatory. Alterations to the domestic wiring system must only be made by a qualified electrician.

Failure to follow this advice may result in electrical shock or death.

⚠ WARNING!

Fire hazard

Do not use adapters, reducers, or branching devices to connect this appliance to the mains power supply.

Failure to follow this advice may result

Before you install the oven, please make sure that

- it will be lifted by two people.
- the oven will rest on a flat surface that can support its weight.
- the benchtop and oven cavity are square and level, and are the required dimensions.
- the height from the floor suits the customer.

⚠ WARNING!

Cut hazard

Take care - panel edges are sharp.

Failure to use caution could result in injury or cuts.

Important safety instructions!

- ***To avoid hazard, follow these instructions carefully before installing or using this appliance.***
- ***Please make this information available to the person installing the appliance - doing so could reduce your installation costs.***
- ***This appliance must be installed and connected to the mains power supply only by a suitably qualified person according to these installation instructions and in compliance with any applicable local building and electricity regulations. Failure to install the appliance correctly could invalidate any warranty or liability claims.***
- ***The oven must be earthed.***
- ***If the power supply cable is damaged, it must be replaced by the manufacturer, its service agent or similarly qualified person in order to avoid a hazard.***

When you install the oven

- Do not seal the oven into the cabinetry with silicone or glue. This makes future servicing difficult. Fisher & Paykel will not cover the costs of removing the oven, or of damage caused by this removal.
- Use the supplied screws to secure the oven to the cabinetry. Do not over-tighten the screws.
- Make sure that the power supply cable will not touch any hot metal parts.

(2,2) -2- 599790H OB60&OB90 installA2 NZGB.indd 25/09/17 12:33 PM

(3,2) -2- 599790H OB60&OB90 installA2 NZGB.indd 25/09/17 12:33 PM

4 UNPACK THE OVEN

5 REMOVE THE DOOR

(1,3) -2- 599790H OB60&OB90 installA2 NZGB.indd 25/09/17 12:33 PM

INSTALLATION INSTRUCTIONS

FISHER & PAYKEL

(2,3) -2- 599790H OB60&OB90 installA2 NZGB.indd 25/09/17 12:33 PM

(3,3) -2- 599790H OB60&OB90 installA2 NZGB.indd 25/09/17 12:33 PM