Fisher&Paykel
innovative living

Installation instructions and user guide

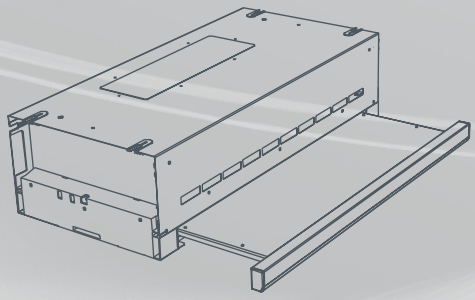

Slideout rangehood

HS60CSRX1, HS60CSRM1, HS60CSRW1, HS90CSX1
HS60CSW1, HS60CSX1, HS60CIW1, HS60CIX1 models

NZ AU

Contents

Safety and warnings	1
Installation instructions	2
Getting started quickly	6
Cleaning and maintenance	7
Manufacturer's warranty	8
Customer care	9

Important!

SAVE THESE INSTRUCTIONS

The models shown in this user guide may not be available in all markets and are subject to change at any time. For current details about model and specification availability in your country, please visit our local website listed on the back cover or contact your local Fisher & Paykel dealer.

Important!

- *Please read the entire set of instructions before installing the rangehood.*
- *This rangehood is not intended for use by young children or infirm persons without supervision.*
- *Young children should be supervised to ensure that they do not play with the rangehood.*
- *There must be adequate ventilation of the room when the rangehood is used at the same time as appliances burning gas or other fuels. (A partial vacuum in the room could result in too high a concentration of gas in the air).*
- *You must read the details concerning the method and frequency of cleaning.*
- *There is a fire risk if cleaning is not carried out in accordance with the instructions.*
- *Do not flambé under the rangehood.*
- *Exhaust air must not be discharged into an existing flue that is used for exhausting fumes from appliances burning gas or other fuels.*
- *The minimum distance between the cooktop surface and the filters of the rangehood shall be 600 mm, or 650 mm if installed over a gas cooktop.*
- *Attention should be given to ensure that any applicable regulations concerning the discharge of exhaust air is fulfilled.*
- *If the supply cord of this equipment is damaged it must only be replaced by the manufacturer, its service agent or similarly qualified person in order to avoid a hazard.*
- *Always switch the power off prior to installation, servicing or cleaning the rangehood.*
- *Never use the rangehood without the filters in place.*
- *Stainless steel or powdercoat is very easily damaged during installation if abraded or knocked by tools. It is recommended to protect the top of the rangehood with cardboard or plastic bag during the installation to minimise the risk of damage occurring.*
- *A power outlet should be within 750 mm of the motor assembly and can be either on the wall, behind the chimney or in the ceiling.*
- *To comply with electrical safety regulations, this rangehood must be plugged into a socket near the appliance. The socket must be accessible, or have an accessible isolating switch, to enable the end user to isolate the rangehood from the power for the purpose of internal cleaning or maintenance.*
- *Ducting accessories are not supplied. All ducting must comply with local requirements and building codes.*

⚠ WARNING!

Electrical Shock Hazard

All electrical work must be done in accordance with local and/or national electrical codes as applicable. For safety, this product must be earthed. If you are unfamiliar with methods of installing electrical wiring, employ the services of a qualified electrician. Turn off power at service entrance before installing wiring or servicing this product.

⚠ WARNING!

6.5 kg

Weight Hazard

The rangehood is heavy. Please ensure adequate care is taken when installing the rangehood to prevent personal injury. The rangehood must be installed onto a solid wall, stud, beam or truss. Weight of the product is 6.5 kg.

Installation instructions

Thank you for purchasing a quality Fisher & Paykel rangehood. Each rangehood is tested and approved before it leaves the factory, ensuring our high standard of quality control is met.

Contents of packaging

- 1 x rangehood
- 1 x installation instructions
- 1 x Installation kit - "SIDE FIXING"
- 1 x Installation kit - "TOP FIXING"
- 4 x Spacer Tube 25.4 mm
- 4 x Screw 8x1.5"
- 4 x Screw 8x1"

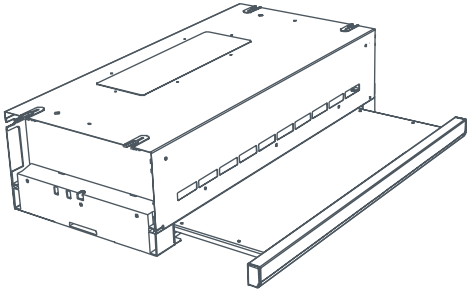

Fig.1 Slideout rangehood

Typical equipment required:

- Electric drill
- Screwdriver
- Duct tape (if ducting)
- Jig saw (if ducting)
- Ladder (if ducting)
- Ducting
- Tape measure
- Drill bits
- Spirit level

Accessories

Accessory	Part Number
Replacement aluminium filter	R103794
Charcoal filter	R103794C
Light bulb	R111020

Height of rangehood

Please read the entire instructions BEFORE installing the rangehood.

- Ascertain the desired installation height of the rangehood.
- When installing the rangehood, the lower edge of the unit must be a minimum of 600 mm (650 mm for gas cooker) above the cooking surface.
- The recommended position for the hood is 650 mm above the cooktop.
- Any installation above 750 mm will compromise the extraction performance.

A = 600 min (electric cook top)
A = 650 min (gas cook top)

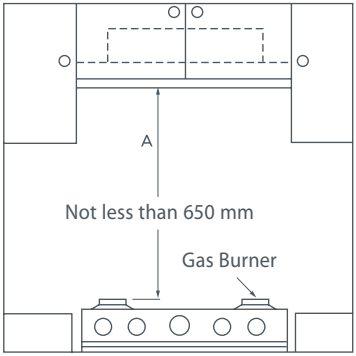

Fig.2 Positioning

Ducting options

Some authorities require rangehoods to be vented outside. Attention should be given to ensure that any applicable regulations concerning the discharge of exhaust air is fulfilled.

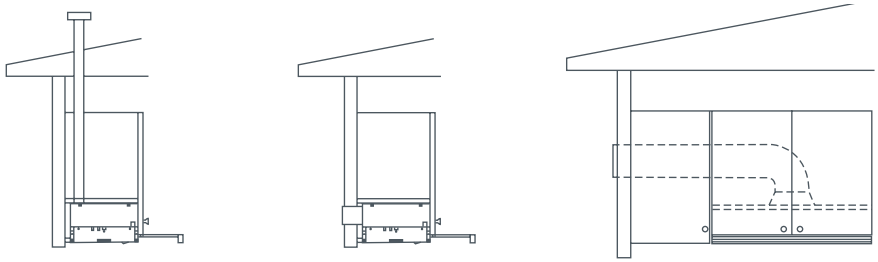

Top ducting through roof | Rear ducted | Side ducting

Fig.3 Ducting options

285 x 85 mm rectangular, or 150 mm diameter round ducting (using a rectangular-to-round adaptor) can be used in conjunction with this model.

For optimal efficiency, use smooth-walled ducting for reduced noise and increased airflow. Flexible ducting should only be used as a last resort.

Note: we recommend an Easy Fit by Fisher & Paykel or a UNIDUCT ducting system, products that have been designed to expel air efficiently.

Preparing the rangehood for installation

Ensure the overhead cabinets are built according to Fig.5 (below).

Before drilling any holes, check that the area behind the surface to be drilled is clear of any electrical cables or pipes etc.

Recirculated installation
If the rangehood is to be installed as a recirculated hood, first ensure the cabinets are built according to Fig. 5 below:

1 Do not remove the knockouts shown in Fig.4. These are removed for ducted options only.
2 Remove Cover Tape "A". See Fig.4.
Note: for recirculation, please purchase a charcoal filter (R103794C).
Please proceed to steps 3 and 4 below.

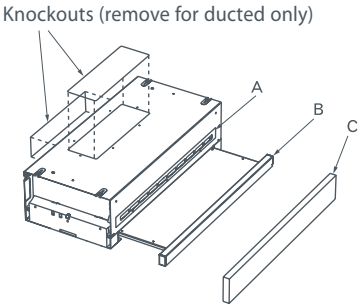

Fig.4 Preparing for install

Ducted installation
If the rangehood is to be installed as a ducted hood:

1 Remove the appropriate knockout to suit rear or top venting, as shown in Fig.4
2 Do not remove Cover Tape "A". See Fig.4. This is removed for recirculating only.
3 If an 80mm handle is not installed, remove front fascia "B" by undoing the 3 screws on the fascia (see Fig. 4).
4 Replace front fascia "B" with a replacement front panel "C", constructed of same or similar material as the surrounding cupboard doors. See Fig. 5 for height of panel.

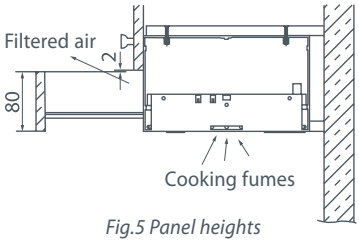

Fig.5 Panel heights

Mounting the rangehood

The rangehood can be mounted in two ways, top or sides.
Before commencement, unpack the rangehood and check that it functions correctly.

Mounting to underside of cupboard
Fix the rangehood to a shelf mounted at the right height in your wall units, by drilling 4 holes, 5 mm in diameter, (see Fig.6) and fixing with the 4 screws supplied (found in the bag labelled "TOP FIXING").

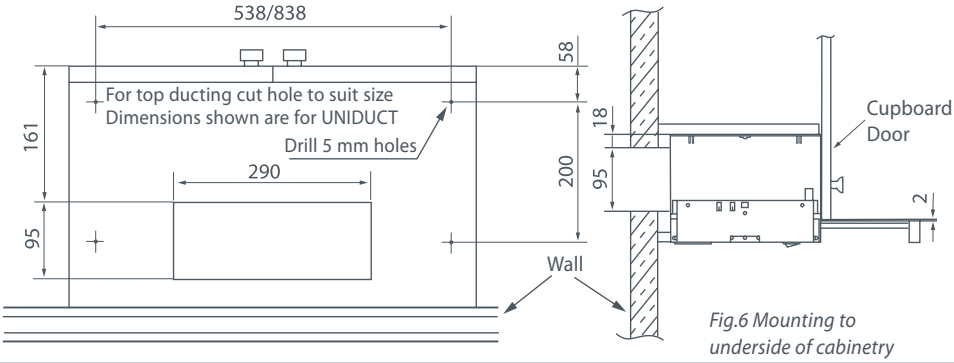

Fig.6 Mounting to underside of cabinetry

Mounting to cabinetry sides

See Installation sheet provided. When mounting to the cabinetry sides, please ensure the correct dowels and screws are used. These can be found in the bag labelled “SIDE FIXING”.

Note: using the incorrect screws for the installed mounting method may cause damage to the product.

Fix rangehood to your wall units, with 2 screws in each side into the vertical panels. To do this:

1. Slide out the drawer and remove filter. You will see two mounting holes running through the moulded sides (see Fig.7).
2. Remove the thin plastic skin (A) from each side fixing hole. An 8 mm diameter drill bit is recommended.
3. Position slideout (ensuring unit is level) and fix in place using screws and hollow dowels through each side fixing hole (see Fig.8). (Check screw length with thickness of cabinet panels).

The rangehood’s plug can be easily plugged into the nearest wall socket, or if connected directly into the house wiring, a registered electrician is required.

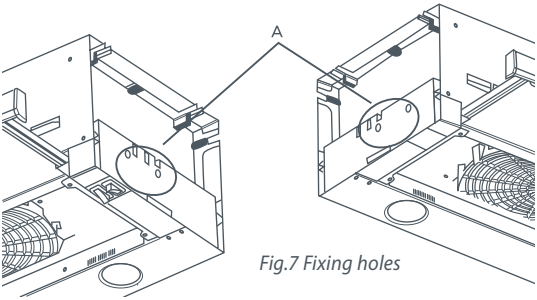

Fig.7 Fixing holes

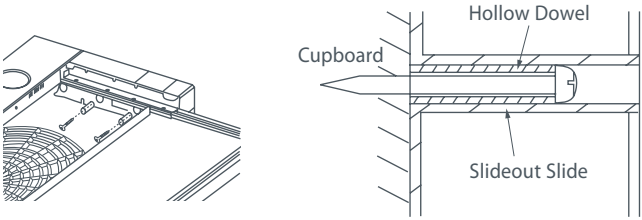

Fig.8 Side mounting

Control panel features

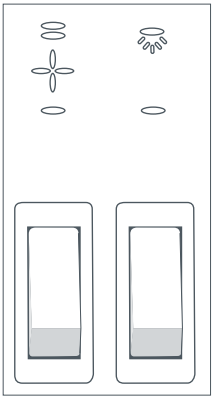

2 speed Axial fan switch
HS60CSX1, HS60CSW1

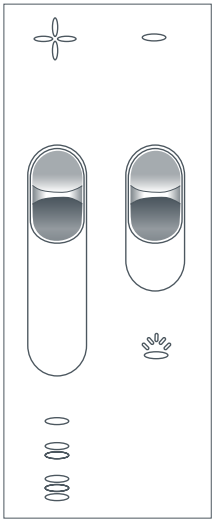

3 speed Centrifugal switch
HS60CIX1, HS60CIW1

Fig.9 Control panels

Light switch: the light can be operated independently from the fan.

Fan switch: the fan can be run at different speeds depending on the cooking requirements.

Caution!

Never use abrasive or oil based liquid cleaners.

General maintenance

The manufacturer is not liable for any damage caused by not following these instructions.

The rangehood should be cleaned regularly using warm water with soap or mild liquid detergents. This ensures that no build-up of grease occurs as these deposits are corrosive. Do not use abrasives or harsh detergents/cleaning fluids.

Note: in areas of high humidity and coastal environments cleaning should be carried out frequently.

Aluminium filter

The grease filter must be periodically cleaned (at least every two months).
Remove the grease filter and wash either by hand using hot soapy water or place them in the dishwasher using mild detergent. A badly smoked filter may be cleaned with "cookware cleaners".

Note: some discolouration of the frame may occur.

When installing or replacing a filter, remove the protective plastic covering from the filter.

Charcoal filter

Charcoal filters are designed to remove grease and odours from cooking vapours, prior to the cleansed air re-entering the kitchen (when the rangehood is in recirculating mode). Charcoal filters are disposable items and it is recommended that these should be replaced every three to six months depending on use.

Note:

- Fully saturated charcoal filters can become a barrier to air movement, impeding the rangehood's performance.
- In the event of fire, fully grease laden filters could be flammable and therefore regular replacement is recommended.
- In ducted installations, conventional aluminium filters are recommended.

For replacement charcoal filters, ducting accessories, spare parts and service, please contact your local supplier or Fisher & Paykel Customer Care Centre.

Light bulb replacement

(Halogen bulb 12 Volts/20 Watt)

1. To replace a light bulb, first disconnect rangehood from power supply.
2. Apply finger pressure to the face of the lamp cover and twist one quarter turn anti-clockwise, the lamp cover will now be free to drop out.
3. Remove the faulty bulb and, using a cloth, fit replacement bulb into the lamp holder. Do not touch the new bulb with fingers as this will shorten the life of the bulb.
4. Refit the lamp cover, applying finger pressure and twist one quarter turn clockwise.

Manufacturer's warranty

When you purchase any new Fisher & Paykel rangehood you automatically receive a two year Manufacturer's Warranty covering parts and labour for servicing.

Fisher & Paykel undertakes to

Repair or, at its option, replace without cost to the owner either for material or labour any part of the Product, the serial number of which appears on the Product, which is found to be defective within TWO YEARS from the date of purchase.

This warranty DOES NOT Cover

A Service calls which are not related to any defect in the Product. The cost of a service call will be charged if the problem is not found to be a Product related fault. For example:
1. Correct the installation of the product.
2. Instruct you how to use the product.
3. Replace house fuses or correct house wiring.
4. Correcting fault(s) caused by the user.
5. Noise or vibration that is considered normal, eg. fan sounds, refrigeration noises or user warning beeps.
6. Correcting damage caused by pests, eg. rats, cockroaches etc.

B Defects caused by factors other than:
1. Normal domestic use or
2. Use in accordance with the Product's User Guide.

C Defects to the Product caused by accident, neglect, misuse or 'Act of God'.

D The cost of repairs carried out by non-authorised repairers or the cost of correcting such unauthorised repairs.

E Normal recommended maintenance as set out in the Product's User Guide.

F Repairs when the appliance has been dismantled, repaired or serviced by other than a Fisher & Paykel AUTHORISED CUSTOMER SERVICE CENTRE or the selling dealer.

G Pick up and delivery.

H Transportation or travelling costs involved in the repair when the product is installed outside the Fisher & Paykel AUTHORISED CUSTOMER SERVICE CENTRE'S normal service area.

Service under this manufacturer's warranty must be provided by an Authorised Service Agent (refer to the Customer care section for contact details). Such service shall be provided during normal business hours. This warranty certificate should be shown when making any claim.

Note:
This Warranty is an extra benefit and does not affect your legal rights and applies only to product purchased in New Zealand and Australia.

Please keep this User Guide in a safe place.

Do not return to Fisher & Paykel.

Check the things you can do yourself.
Refer to your User Guide and check:

1 Your appliance is correctly installed.
2 You are familiar with its normal operation.

If after checking these points you still need assistance, please refer to your nearest Authorised Service Centre, or contact us through our local website listed on the back cover.

In New Zealand if you need assistance...*

Call your Fisher & Paykel retailer who is trained to provide information on your appliance, or if we can be of any further help, please contact our Customer Care Centre,
Toll Free: 0800 FP CARE or 0800 37 22 73 **Fax:** (09) 273 0656
Email: customer.care@fp.co.nz
Postal address: P.O. Box 58732, Greenmount, Auckland

If you need service...*
Fisher & Paykel has a network of independent Fisher & Paykel Authorised Service Centres whose fully trained technicians can carry out any service necessary on your appliance. Your dealer or our Customer Care Centre can recommend an Authorised Service Centre in your area.

In Australia if you need assistance...*

Call the Fisher & Paykel Customer Care Centre and talk to one of our Customer Care Consultants.
Toll Free: 13 00 650 590 **Fax:** (07) 3826 9298
Email: customer.care@fp.com.au
Postal Address: PO Box 798, Cleveland QLD 4163

If you need service...*
Fisher & Paykel Australia Pty Ltd has a network of independent Fisher & Paykel Authorised Service Centres whose fully trained technicians can carry out any service necessary on your appliance. Our Customer Care Centre can recommend an Authorised Service Centre in your area.

*If you call or write, please provide: name, address, model number, serial number, date of purchase and a description of the problem. This information is needed in order to better respond to your request for assistance.

Product Details

Fisher & Paykel Appliances Ltd

Model/Serial No.

Date of Purchase _____ **Purchaser** _____

Dealer _____ **Suburb** _____

Town _____ **Country** _____

Copyright © Fisher & Paykel 2008. All rights reserved.
The product specifications in this booklet apply to the specific products and models described at the date of issue. Under our policy of continuous product improvement, these specifications may change at any time. You should therefore check with your Dealer to ensure this booklet correctly describes the product currently available.

www.fisherpaykel.co.nz
www.fp.com.au

NZ AU
Slideout rangehood
Installation instructions and user guide
Published: 10/2008
Part No. 111024 G