Washing Machine

User manual

WD90HG4*****

SAMSUNG

U500 COMBO_WD4000H_WEB_IB_WASHER-MD_EN(SA).indd 1 2026/3/17 15:34:54

Contents

Safety information 4

What you need to know about the safety instructions 4
Important safety symbols 4
Important safety precautions 5
To minimize the risk of fire in a tumble dryer, the following should be observed 8
Critical installation warnings 10
Installation cautions 12
Critical usage warnings 12
Usage cautions 13
Critical cleaning warnings 16

Installation 17

What's included 17
Installation requirements 19
Step-by-step installation 20
Environment 30

Before you start 31

Initial settings 31
Laundry guidelines 31
Detergent drawer guidelines 35

Operations 39

Control panel 39
Simple steps to start 40
Cycle overview 41
Settings 43

Maintenance 44

DRUM CLEAN 44
Smart check 45
Emergency drain 46
Cleaning 47
Recovery from freezing 50
Care against an extended time of disuse 50

U500 COMBO_WD4000H_WEB_IB_WASHER-MD_EN(SA).indd 2 2026/3/17 15:34:54

Troubleshooting 51

Checkpoints 51
Information codes 55

Specifications 57

Fabric care chart 57
Protecting the environment 59
Specification sheet 59

U500 COMBO_WD4000H_WEB_IB_WASHER-MD_EN(SA).indd 3 2026/3/17 15:34:54

Safety information

Congratulations on your new Samsung washing machine. This manual contains important information on the installation, use and care of your appliance. Please take some time to read this manual to take full advantage of your washing machine's many benefits and features.

What you need to know about the safety instructions

Please read this manual thoroughly to ensure that you know how to safely and efficiently operate the extensive features and functions of your new appliance. Please store the manual in a safe location close to the appliance for future reference. Use this appliance only for its intended purpose as described in this instruction manual.

Warnings and Important Safety Instructions in this manual do not cover all possible conditions and situations that may occur. It is your responsibility to use common sense, caution and care when installing, maintaining and operating your washing machine.

Because the following operating instructions cover various models, the characteristics of your washing machine may differ slightly from those described in this manual and not all warning signs may be applicable. If you have any questions or concerns, contact your nearest service centre or find help and information online at www.samsung.com.

Important safety symbols

What the icons and signs in this user manual mean:

⚠ **WARNING**

Hazards or unsafe practices that may result in **severe personal injury, death and/or property damage.**

⚠ **CAUTION**

Hazards or unsafe practices that may result in **personal injury and/or property damage.**

NOTE

Indicates that a risk of personal injury or material damage exists.

CAUTION

To reduce the risk of fire or explosion, follow these basic precautions.

Read the instructions

These warning signs are here to prevent injury to yourself and others.
Please follow them explicitly.
After reading this manual, store it in a safe place for future reference.

Read all instructions before using the appliance.

As with any equipment that uses electricity and moving parts, potential hazards exist. To safely operate this appliance, familiarize yourself with its operation and exercise care when using it.

U500 COMBO_WD4000H_WEB_IB_WASHER-MD_EN(SA).indd 4 2026/3/17 15:34:54

Important safety precautions

⚠ WARNING

To reduce the risk of fire, electric shock, or injury to persons when using your appliance, follow basic precautions, including the following:

1. This appliance is not intended for use by persons (including children) with reduced physical, sensory or mental capabilities, or lack of experience and knowledge, unless they have been given supervision or instruction concerning use of the appliance by a person responsible for their safety.
2. **For use in Europe**: This appliance can be used by children aged from 8 years and above and persons with reduced physical, sensory or mental capabilities or lack of experience and knowledge if they have been given supervision or instruction concerning use of the appliance in a safe way and understand the hazards involved. Children shall not play with the appliance. Cleaning and user maintenance shall not be made by children without supervision.
3. Children should be supervised to ensure that they do not play with the appliance.
4. If the supply cord is damaged, it must be replaced by the manufacturer, its service agent or similarly qualified persons in order to avoid a hazard.
5. The new hose-sets supplied with the appliance are to be used and that old hose-sets should not be reused.

U500 COMBO_WD4000H_WEB_IB_WASHER-MD_EN(SA).indd 5 2026/3/17 15:34:54

6. For appliances with ventilation openings in the base, that a carpet must not obstruct the openings;
7. **For use in Europe**: Children of less than 3 years should be kept away unless continuously supervised.
8. **CAUTION**: In order to avoid a hazard due to inadvertent resetting of the thermal cut-out, this appliance must not be supplied through an external switching device, such as a timer, or connected to a circuit that is regularly switched on and off by the utility.
9. The tumble dryer is not to be used if industrial chemicals have been used for cleaning.
10. The lint trap has to be cleaned frequently, if applicable.
11. Lint must not to be allowed to accumulate around the tumble dryer. (not applicable for appliances intended to be vented to the exterior of the building)
12. Adequate ventilation has to be provided to avoid the back flow of gases into the room from appliances burning other fuels, including open fires.
13. Do not dry unwashed items in the tumble dryer.
14. Items that have been soiled with substances such as cooking oil, acetone, alcohol, petrol, kerosene, spot removers, turpentine, waxes and wax removers should be washed in hot water with an extra amount of detergent before being dried in the tumble dryer.

U500 COMBO_WD4000H_WEB_IB_WASHER-MD_EN(SA).indd 6 2026/3/17 15:34:55

15. Items such as foam rubber (latex foam), shower caps, waterproof textiles, rubber backed articles and clothes or pillows fitted with foam rubber pads should not be dried in the tumble dryer.
16. Fabric softeners, or similar products, should be used as specified by the fabric softener instructions.
17. The final part of a tumble dryer cycle occurs without heat (cool down cycle) to ensure that the items are left at a temperature that ensures that the items will not be damaged.
18. Remove all objects from pockets such as lighters and matches.
19. **WARNING**: Never stop a tumble dryer before the end of the drying cycle unless all items are quickly removed and spread out so that the heat is dissipated.
20. Exhaust air must not be discharged into a flue which is used for exhausting fumes from appliances burning gas or other fuels.
21. The appliance must not be installed behind a lockable door, a sliding door or a door with a hinge on the opposite side to that of the tumble dryer, in such a way that a full opening of the tumble dryer door is restricted.
22. **WARNING**: The appliance must not be supplied through an external switching device, such as a timer, or connected to a circuit that is regularly switched on and off by a utility.

U500 COMBO_WD4000H_WEB_IB_WASHER-MD_EN(SA).indd 7 2026/3/17 15:34:55

23. This appliance is intended to be used in household only and it is not intended to be used such as:

- staff kitchen areas in shops, offices and other working environments;
- farm houses;
- by clients in hotels, motels and other residential type environments;
- bed and breakfast type environments;
- areas for communal use in blocks of flats or in launderettes.

To minimize the risk of fire in a tumble dryer, the following should be observed

CAUTION

Items that have been spotted or soaked with vegetable or cooking oil constitute a fire hazard and should not be placed in a tumble dryer. Oil-affected items can ignit spontaneously, especially when exposed to heat sources such as in a tumble dryer. The items become warm, causing an oxidation reaction in the oil. Oxidation creates heat. If the heat cannot escape, the items can become hot enough to catch fire. Piling, stackin or storing oil-affected items can prevent heat from escaping and so create a fire hazard. If it is unavoidable that fabrics that contain vegetable or cooking oil or have been contaminated by hair care products be placed in a tumble dryer they should first be washed in hot water with extra detergent – this will reduce, but not eliminate, the hazard. The ‘cool down’ cycle of tumble dryers should be used to reduce the temperature of the items. They should not be removed from the tumble dryer or piled or stacked while hot.

Items that have been previously cleaned in, washed in, soaked in or spotted with petrol/gasoline, dry-cleaning solvents or other flammable or explosive substances should no be placed in a tumble dryer. Highly flammable substances commonly used in domesti environments include acetone, denatured alcohol, petrol/gasoline, kerosene, spot removers(some brands), turpentine, waxes and wax removers.

Items containing foam rubber(also known as latex foam) or similarly textured rubber. Like materials should not be dried in a tumble dryer on a heat setting. Foam rubber materials can, when heated, produce fire by spontaneous combustion

Fabric softeners or similar products should not be used in a tumble dryer to eliminate the effects of static electricity unless this practice is specifically recommended by th manufacturer of the fabric softener or product.

Undergarments that contain metal reinforcements should not be placed in a tumble dryer. Damage to the tumble dryer can result if metal reinforcements come loose during drying. When available a drying rack could be used for such items.

U500 COMBO_WD4000H_WEB_IB_WASHER-MD_EN(SA).indd 8 2026/3/17 15:34:55

Plastic articles such as shower caps or babies' waterproof napkin covers should not be placed in a tumble dryer.

Rubber-backed articles, clothes fitted with foam rubber pads, pillows, galoshes an rubber-coated tennis shoes should not be placed in a tumble dryer.

Do not dry unwashed items in the tumble dryer(or washing machine drying mode,etc).

Items that have been soiled with substances such as cooking oil, acetone, alcohol, petrol, Kerosene, spot removers, turpentine, waxes and wax removers should be washed in hot water with an extra amount of detergent before being dried in the tumble dryer.

Items such as foam rubber(latex foam), shower caps, waterproof textiles, rubber backed articles and clothes or pillows fitted with foam rubber pads should not be dried in th tumble dryer.

Fabric softeners, or similar products, should be used as specified by the fabric softene instructions.

The final part of a tumble dryer cycle occurs without heat(cool down cycle) to ensure tha the items are left at a temperature that ensures that the items will not be damaged.

Oil-affected items can ignite spontaneously, especially when exposed to heat sources such as in a tumble dryer. The items become warm, causing an oxidation reaction in the oil. Oxidation creates heat. If the heat cannot escape, the items can become hot enough to catch fire. Piling, stacking or storing oil-affected items can prevent heat from escapin and so create a fire hazard.

If it is unavoidable that fabrics that contain vegetable or cooking oil or have been contaminated by hair care products be placed in a tumble dryer they should first b washed in hot water with extra detergent - this will reduce, but not eliminate, the hazard.

Never stop a tumble dryer before the end of the drying cycle unless all items are quickly removed and spread out so that the heat is dissipated.

Remove all objects from pockets such as lighters and matches.

The tumble dryer(or washing machine drying mode, etc) is not to be used if industrial chemicals have been used for cleaning.

U500 COMBO_WD4000H_WEB_IB_WASHER-MD_EN(SA).indd 9 2026/3/17 15:34:55

Safety information

Critical installation warnings

⚠ **WARNING**

The installation of this appliance must be performed by a qualified technician or service company.

- Failure to do so may result in electric shock, fire, an explosion, problems with the appliance, or injury.

The appliance is heavy, therefore take care when lifting it.

Plug the power cord firmly into a wall socket that meets local electrical specifications. Use the socket for this appliance only, and do not use an extension cord.

- Sharing a wall socket with other appliances using a power strip or extending the power cord may result in electric shock or fire.
- Ensure that the power voltage, frequency, and current are the same as those of the product specifications. Failure to do so may result in electric shock or fire.

Remove all foreign substances such as dust or water from the power plug terminals and contact points using a dry cloth on a regular basis.

- Unplug the power plug and clean it with a dry cloth.
- Failure to do so may result in electric shock or fire.

Plug the power plug into the wall socket so that the cord is running towards the floor.

- If you plug the power plug into the socket in the opposite direction, the electric wires within the cable may be damaged and this may result in electric shock or fire.

Keep all packaging materials out of the reach of children as these may be dangerous.

- If a child places a bag over its head, it may suffocate.

When the appliance, power plug or power cord is damaged, contact your nearest service centre.

This appliance must be properly grounded.

Do not ground the appliance to a gas pipe, plastic water pipe, or telephone line.

- This may result in electric shock, fire, an explosion, or problems with the appliance.
- Never plug the power cord into a socket that is not grounded correctly and make sure that it is in accordance with local and national regulations.

Do not install this appliance near a heater or any inflammable material.

Do not install this appliance in a humid, oily or dusty location, or in a location exposed to direct sunlight or water (rain drops).

Do not install this appliance in a location exposed to low temperatures.

- Frost may cause the tubes to burst.

Do not install this appliance in a location where gas may leak.

- This may result in electric shock or fire.

Do not use an electric transformer.

- This may result in electric shock or fire.

U500 COMBO_WD4000H_WEB_IB_WASHER-MD_EN(SA).indd 10 2026/3/17 15:34:55

Do not use a damaged power plug, damaged power cord, or loose wall socket.

- This may result in electric shock or fire.

Do not pull or excessively bend the power cord.

Do not twist or tie the power cord.

Do not hook the power cord over a metal object, place a heavy object on the power cord, insert the power cord between objects, or push the power cord into the space behind the appliance.

- This may result in electric shock or fire.

Do not pull the power cord when unplugging the power plug.

- Unplug the power plug by holding the plug.
- Failure to do so may result in electric shock or fire.

This appliance should be positioned so that the power plug, the water supply taps, and the drain pipes are accessible.

Following the repair by a non-authorized service provider, self-repair or non-professional repair of the product, Samsung is not liable for any damage to the product, any injury or any other product safety issue caused by any attempt to repair the product which does not carefully follow these repair and maintenance instructions. Any damage to the product caused by an attempt to repair the product by any person other than a Samsung certified service provider will not be covered by the warranty.

U500 COMBO_WD4000H_WEB_IB_WASHER-MD_EN(SA).indd 11 2026/3/17 15:34:55

Safety information

Installation cautions

⚠ **CAUTION**

This appliance should be positioned in such a way that the power plug is easily accessible.

- Failure to do so may result in electric shock or fire due to electric leakage.

Install your appliance on a solid, level floor that can support its weight.

- Failure to do so may result in abnormal vibrations, movement, noise, or problems with the appliance.

Critical usage warnings

⚠ **WARNING**

If the appliance is flooded, turn off the water & power supplies immediately and contact your nearest service centre.

- Do not touch the power plug with wet hands.
- Failure to do so may result in electric shock.

If the appliance generates a strange noise, a burning smell, or smoke, unplug the power cord immediately and contact your nearest service centre.

- Failure to do so may result in electric shock or fire.

In the event of a gas leak (such as propane gas, LP gas, etc.), ventilate immediately without touching the power plug. Do not touch the appliance or power cord.

- Do not use a ventilating fan.
- A spark may result in an explosion or fire.

Remove the washing machine door lever before disposing the appliance.

- If trapped inside the appliance, children may suffocate to death.

Make sure to remove the packaging (sponge, styrofoam) attached to the bottom of the washing machine before using it.

Do not wash items contaminated with gasoline, kerosene, benzene, paint thinner, alcohol or other inflammable or explosive substances.

- This may result in electric shock, fire, or an explosion.

Do not open the washing machine door by force while it is operating (high-temperature washing/drying/spinning).

- Water flowing out of the washing machine may result in burns or cause the floor to be slippery. This may result in injury.
- Opening the door by force may result in damage to the appliance or injury.

Do not touch the power plug with wet hands.

- This may result in electric shock.

Do not turn the appliance off by unplugging the power cord while an operation is in progress.

- Plugging the power cord into the wall socket again may cause a spark and result in electric shock or fire.

U500 COMBO_WD4000H_WEB_IB_WASHER-MD_EN(SA).indd 12 2026/3/17 15:34:55

Do not let children climb in or onto the appliance.

- This may result in electric shock, burns or injury.

Do not put your hand under the washing machine.

- You may injure your hand on rotating or sharp (metal or plastic, etc.) parts.

Do not unplug the appliance by pulling the power cord. Always grip the plug firmly and pull it straight out of the outlet.

- Damage to the power cord may cause a short-circuit, fire and/or electric shock.

Do not attempt to repair, disassemble, or modify the appliance yourself.

- Do not use a fuse (such as copper, steel wire, etc.) other than a standard fuse.
- When the appliance needs to be repaired or reinstalled, contact your nearest service centre.
- Failure to do so may result in electric shock, fire, problems with the appliance, or injury.

If the water supply hose comes loose from the water tap and floods the appliance, unplug the power cord.

- Failure to do so may result in electric shock or fire.

Unplug the power cord when the appliance is not being used for long periods of time or during a thunder or lightning storm.

- Failure to do so may result in electric shock or fire.

If any foreign substance enters into the appliance, unplug the power cord and contact your nearest Samsung Customer Service.

- This may result in electric shock or fire.

Do not let children (or pets) play in or on your washing machine. The washing machine door does not open easily from the inside and children may be seriously injured if trapped inside.

Usage cautions

⚠ **CAUTION**

When the washing machine is contaminated by a foreign substance such as detergent, dirt, food waste, etc., unplug the power cord and clean the washing machine using a damp, soft cloth.

- Failure to do so may result in discolouration, deformation, damage, or rust.

The front glass may be broken by a strong impact. Take care when using the washing machine.

- If the glass is broken, it may result in injury.

Open the water tap slowly after a long period of non-use, water supply failure, or when reconnecting the water supply hose.

- The air pressure in the water supply hose or the water pipe may damage a part of the appliance or result in a water leak.

If a draining error occurs during an operation, check if there is a draining problem.

- If the washing machine is used when it is flooded because of a draining problem, it may result in electric shock or fire.

U500 COMBO_WD4000H_WEB_IB_WASHER-MD_EN(SA).indd 13 2026/3/17 15:34:55

Insert the laundry into the washing machine completely so that the laundry does not get caught in the door.

- If laundry gets caught in the door, it may result in damage to the laundry or the washing machine, or result in a water leak.

Turn the water supply off when the washing machine is not being used.

- Ensure that the screws on the water supply hose connector are properly tightened.

Ensure that the rubber seal and front door glass are not contaminated by a foreign substance (e.g. waste, thread, hair, etc.).

- If a foreign substance is caught in the door or the door is not completely closed, it may cause a water leak.

Open the water tap and check if the water supply hose connector is firmly tightened and that there is no water leak before using the appliance.

- If the screws on the water supply hose connector are loose, it may result in a water leak.

The appliance you have purchased is designed for domestic use only.

Using the appliance for business purposes qualifies as an appliance misuse. In this case, the appliance will not be covered by the standard warranty provided by Samsung and no responsibility can be attributed to Samsung for malfunctions or damages resulting from such misuse.

Do not stand on the appliance or place objects (such as laundry, lighted candles, lighted cigarettes, dishes, chemicals, metal objects, etc.) on the appliance.

- This may result in electric shock, fire, problems with the appliance, or injury.

Do not spray volatile material such as insecticide onto the surface of the appliance.

- As well as being harmful to humans, this may result in electric shock, fire or problems with the appliance.

Do not place objects that generate electromagnetic fields near the washing machine.

- This may result in injury due to a malfunction.

Water drained during a high-temperature wash or drying cycle is hot. Do not touch the water.

- This may result in burns or injury.

Draining time may vary depending on the water temperature. If the water temperature is too high, the draining process starts after the water cools down.

Do not wash, spin, or dry water-proof seats, mats, or clothing (*) unless your appliance has a special cycle for washing these items.

(*): Woollen bedding, rain covers, fishing vests, ski pants, sleeping bags, diaper covers, sweat suits, and bicycle, motor cycle and car covers, etc.

- Do not wash thick or hard mats even if the washing machine mark is on the care label. This may result in injury or damage to the washing machine, walls, floor, or clothing due to abnormal vibrations.
- Do not wash throw rugs or doormats with rubber backing. The rubber backing may come off and stick to inside the drum, and this may result in malfunction such as a drainage error.

U500 COMBO_WD4000H_WEB_IB_WASHER-MD_EN(SA).indd 14 2026/3/17 15:34:55

Do not operate the washing machine when the detergent drawer is removed.

- This may result in electric shock or injury due to a water leak.

Do not touch the insides of the drum during or just after drying as it is hot.

- This may result in burns.

The door glass becomes hot during washing and drying. Therefore, do not touch the door glass.

Also, do not allow children to play around the washing machine or touch the door glass.

- This may result in burns.

Do not insert your hand into the detergent drawer.

- This may result in injury as your hand may be caught by the detergent input device.

Remove the liquid detergent guide (applicable models only) when using powdered detergent.

- If not, water may leak through the front of the detergent drawer.

Do not place any objects (such as shoes, food waste, animals) other than laundry into the washing machine.

- This may result in damage to the washing machine, or injury and death in the case of pets due to the abnormal vibrations.

Do not press the buttons using sharp objects such as pins, knifes, fingernails, etc.

- This may result in electric shock or injury.

Do not wash laundry contaminated by oils, creams or lotions usually found in skincare shops or massage clinics.

- This may cause the rubber seal to become deformed and result in a water leak.

Do not leave metal objects such as safety pins, hair pins or bleach in the drum for long periods of time.

- This may cause the drum to rust.
- If rust starts appearing on the surface of the drum, apply a (neutral) cleansing agent to the surface and use a sponge to clean it. Never use a metal brush.

Do not use dry cleaning detergent directly and do not wash, rinse, or spin laundry contaminated by dry cleaning detergent.

- This may result in spontaneous combustion or ignition due to the heat from the oxidation of the oil.

Do not use water from water cooling/heating devices.

- This may result in problems with the washing machine.

Do not use natural hand-washing soap for the washing machine.

- If it hardens and accumulates inside the washing machine, it may result in problems with the appliance, discolouration, rust, or bad odours.

Place socks and brassieres in a washing net and wash them with the other laundry.

Do not wash large laundry items such as bedding in the washing net.

- Failure to do so may result in injury due to abnormal vibrations.

Do not use hardened detergent.

- If it accumulates inside the washing machine, it may result in a water leak.

U500 COMBO_WD4000H_WEB_IB_WASHER-MD_EN(SA).indd 15 2026/3/17 15:34:55

Safety information

Make sure that the pockets of all the clothing items to be washed are empty.

- Hard, sharp objects such as coins, safety pins, nails, screws, or stones can cause extensive damage to the appliance.

Do not wash clothing with large buckles, buttons or other heavy metal objects.

Sort the laundry by colour on the basis of its colorfastness and select the recommended cycle, water temperature and additional functions.

- This may result in discolouration or fabric damage.

Take care that children's fingers are not caught in the door when you close it.

- Failure to do so may result in injury.

To prevent odours and mould, leave the door open after a wash cycle to allow the drum to dry.

To prevent limescale build up, leave the detergent drawer open after a wash cycle and dry inside it.

Critical cleaning warnings

⚠ **WARNING**

Do not clean the appliance by spraying water directly onto it.

Do not use a strong acidic cleaning agent.

Do not use benzene, thinner or alcohol to clean the appliance.

- This may result in discolouration, deformation, damage, electric shock or fire.

Before cleaning or performing maintenance, unplug the appliance from the wall socket.

- Failure to do so may result in electric shock or fire.

U500 COMBO_WD4000H_WEB_IB_WASHER-MD_EN(SA).indd 16 2026/3/17 15:34:55

Installation

Follow these instructions carefully to ensure proper installation of the washing machine and to prevent accidents when doing laundry.

What's included

Make sure all the parts are included in the product package. If you have a problem with the washing machine or the parts, contact a local Samsung customer centre or the retailer.

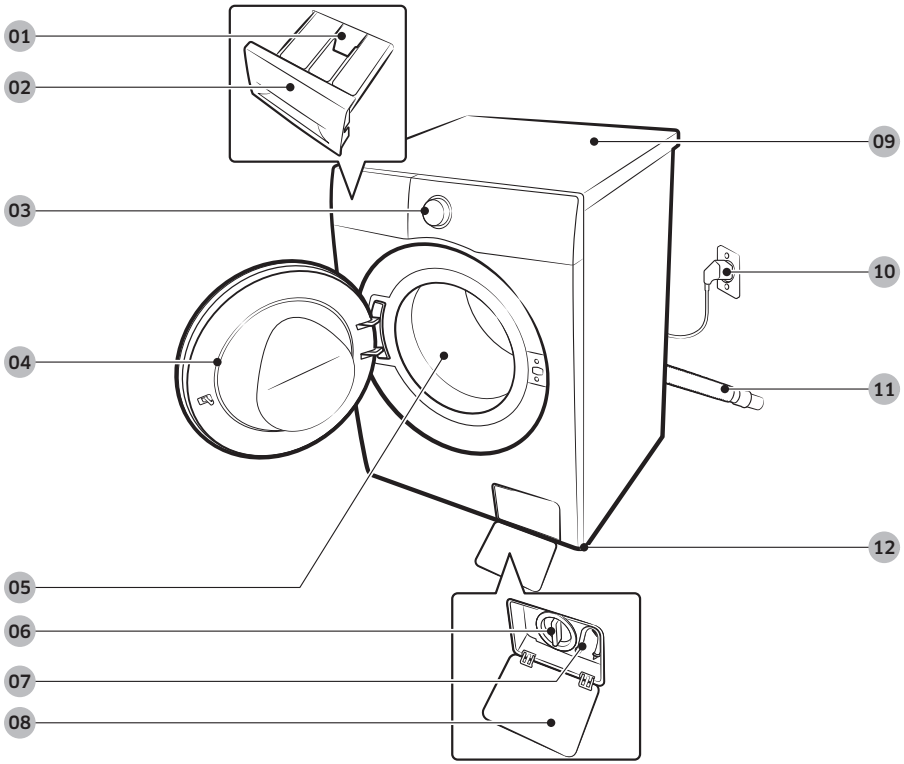

01 Release lever

02 Detergent drawer

03 Control panel

04 Door

05 Drum

06 Debris filter

07 Emergency drain tube

08 Filter cover

09 Worktop

10 Power plug

11 Drain hose

12 Levelling feet

U500 COMBO_WD4000H_WEB_IB_WASHER-MD_EN(SA).indd 17 2026/3/17 15:34:55

Installation

Spanner

Bolt caps

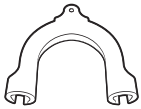

Hose guide

Cold water hose

Hot water hose

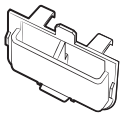

Liquid detergent guide

Cap fixer

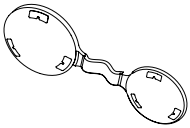

Cap fixer

NOTE

- Spanner: For removing the shipping bolts and levelling the washing machine.
- Bolt caps: For covering the holes after removing the shipping bolts. The provided number of bolt caps depends on the model.
- Hose guide: For hanging the drain hose in the drainpipe or wash-basin.
- Cold/Hot water hose: For supplying water to the washing machine. (Hot water hoses is for applicable models only.)
- Liquid detergent guide: Insert it in the detergent compartment to use liquid detergent. (applicable models only)

U500 COMBO_WD4000H_WEB_IB_WASHER-MD_EN(SA).indd 18 2026/3/17 15:34:56

Installation requirements

Electrical supply and grounding

- Use an individual branch circuit specific to the washing machine.

To ensure proper grounding, the washing machine comes with a power cord featuring a three-prong grounding plug for use in a properly installed and grounded outlet.

Check with a qualified electrician or service person if you are not sure about the grounding.

Do not modify the provided plug. If it does not fit the outlet, call a qualified electrician to install a proper outlet.

⚠ **WARNING**

- Do NOT use an extension cord.
- Use only the power cord that comes with the washing machine.
- Do NOT connect the ground wire to plastic plumbing, gas lines, or hot water pipes.
- Improperly connected grounding conductors may cause electric shock.

Water supply

A proper water pressure for this washing machine is between 50 kPa and 800 kPa. Water pressure less than 50 kPa may cause the water valve not to close completely or it may take longer to fill the drum, causing the washing machine to turn off. Water taps must be within 120 cm from the rear of the washing machine so that the provided inlet hoses reach the washing machine.

To reduce the risk of leaks:

- Make sure water taps are easily accessible.
- Turn off the taps when the washing machine is not in use.
- Check for any leaks at the water inlet hose fittings on a regular basis.

⚠ **CAUTION**

Before using the washing machine for the first time, check all connections at the water valve and taps for any leaks.

Drain

Samsung recommends a standpipe in height of 60-90 cm. The drain hose must be connected through the hose clip to the standpipe, and the standpipe must fully cover the drain hose.

U500 COMBO_WD4000H_WEB_IB_WASHER-MD_EN(SA).indd 19 2026/3/17 15:34:56

Installation

Flooring

For best performance, the washing machine must be installed on a solid floor. Wood floors may need to be reinforced to minimise vibration and/or unbalanced loads. Carpeting and soft tile surfaces are not a good resistance to vibrations and may cause the washing machine to move slightly during the spin cycle.

⚠ **CAUTION**

Do NOT install the washing machine on a platform or a poorly supported structure.

Water temperature

Do not install the washing machine in areas where water may freeze as the washing machine always retains some water in its water valves, pumps, and/or hoses. Frozen water left in the connection parts may cause damage to belts, the pump, and other components of the washing machine.

Alcove or closet installation

Minimum clearance for stable operation:

Sides	25 mm
Top	25 mm
Rear	50 mm
Front	550 mm

If both the washing machine and a dryer are installed in the same location, the front of the alcove or closet must have at least a 550 mm unobstructed air opening. Your washing machine alone does not require a specific air opening.

Step-by-step installation

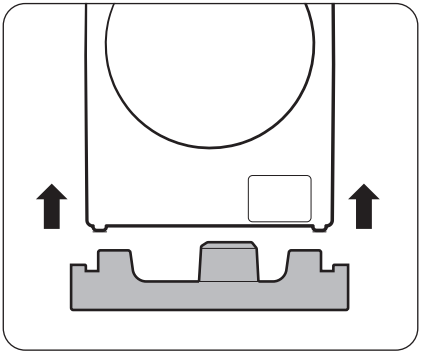

NOTE

While unpacking the washing machine, lift the washing machine from the foam base. Make sure the drum support was removed from the bottom of the washing machine.

U500 COMBO_WD4000H_WEB_IB_WASHER-MD_EN(SA).indd 20 2026/3/17 15:34:56

STEP 1 Select a location

Location requirements:

- Solid, level surface without carpeting or flooring that may obstruct ventilation
- Away from direct sunlight
- Adequate room for ventilation and wiring
- The ambient temperature is always higher than the freezing point (0 °C)
- Away from a heat source

STEP 2 Remove the shipping bolts

Unpack the product package and remove all shipping bolts.

NOTE

Number of shipping bolts may differ depending on the model.

WARNING

- Packaging materials can be dangerous to children. Dispose all packaging material (plastic bags, polystyrene, etc.) safely and out of children's reach.
- To avoid injury, cover the holes with bolt caps after removing the shipping bolts. Do not move the washing machine without the shipping bolts in place. Assemble the shipping bolts before moving the washing machine to another location. Keep the shipping bolts in a safe place for future use.

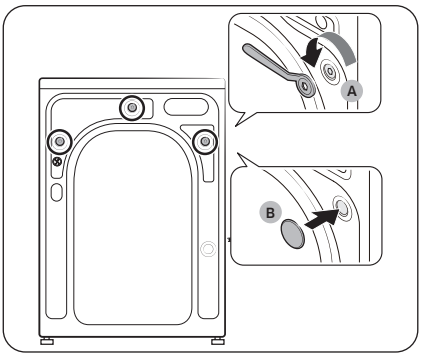

1. Locate the **shipping bolts (A)** on the rear side of the washing machine.
2. Using the supplied spanner, loosen all the shipping bolts by turning them counterclockwise.
3. Insert the **bolt caps (B)** to the holes.

NOTE

You must keep the shipping bolts for future use.

U500 COMBO_WD4000H_WEB_IB_WASHER-MD_EN(SA).indd 21 2026/3/17 15:34:56

Installation

STEP 3 Adjust the levelling feet

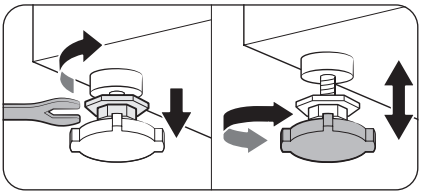

1. Gently slide the washing machine into position. Excessive force may damage the levelling feet.

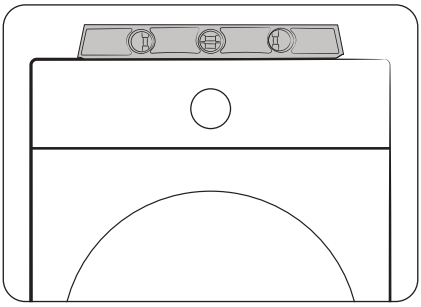

2. Level the washing machine by manually adjusting the levelling feet.

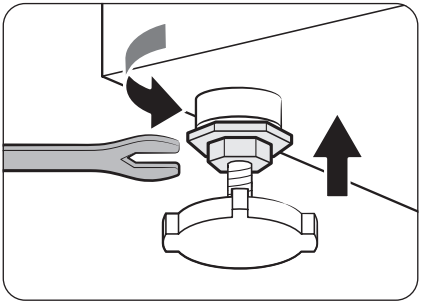

3. When levelling is complete, tighten the nuts using the spanner.

U500 COMBO_WD4000H_WEB_IB_WASHER-MD_EN(SA).indd 22 2026/3/17 15:34:57

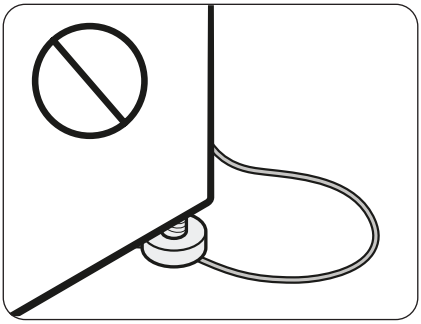

⚠ **CAUTION**

When installing the product make sure the levelling feet is not pressing the power cord.

⚠ **CAUTION**

Make sure all the levelling feet are seating on the floor surface to avoid the washing machine from moving or generating noise due to vibration Then, check if the washing machine is not rocking. If the washing machine is not rocking, tighten the nuts.

U500 COMBO_WD4000H_WEB_IB_WASHER-MD_EN(SA).indd 23 2026/3/17 15:34:57

STEP 4 Connect the water hose

The provided water hose may differ depending on the model. Please follow the instruction according to the provided water hose.

Connecting to a threaded water tap

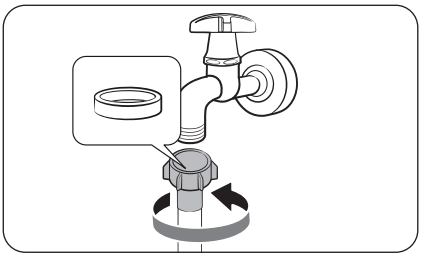

1. Connect the water hose to the water tap, and then turn the connector clockwise as shown.

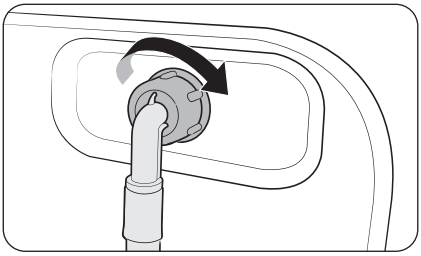

2. Connect the other end of the water hose to the inlet valve on the back of the washing machine. Turn the hose clockwise to tighten.

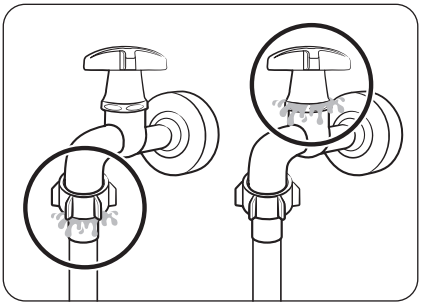

3. Open the water tap and check if there are any leaks around the connection areas. If there are water leaks, repeat the steps above.

⚠ **WARNING**

If there is a water leak, stop operating the washing machine and disconnect from the electrical supply. Then, contact a local Samsung service centre in case of a leak from the water hose, or contact a plumbing technician in case of a leak from the water tap. Otherwise, this may cause electric shock.

U500 COMBO_WD4000H_WEB_IB_WASHER-MD_EN(SA).indd 24 2026/3/17 15:34:57

⚠ **CAUTION**

Do not stretch the water hose by force. If the hose is too short, replace the hose with a longer, high-pressure hose.

Connecting to a non-threaded water tap

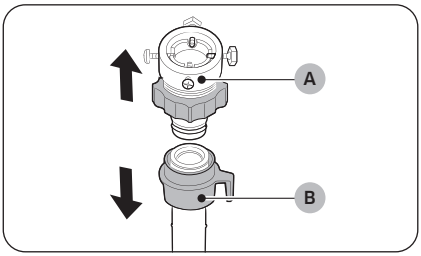

1. Remove the **adaptor (A)** from the water **hose (B)**.

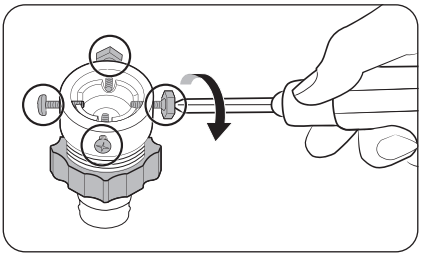

2. Use a Phillips screwdriver to loosen four screws on the adaptor.

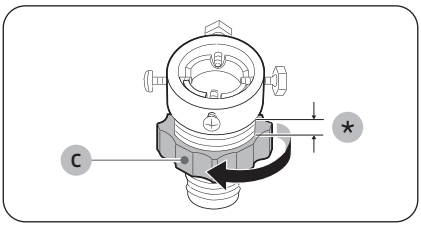

3. Hold the adaptor and turn **part (C)** in the arrow direction to loosen it by 5 mm (*).

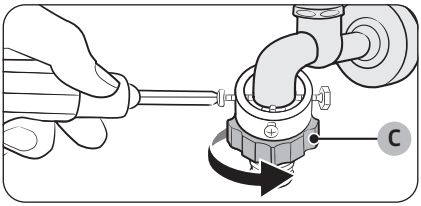

4. Insert the adaptor onto the water tap, and then tighten the screws while lifting the adaptor.
5. Turn **part (C)** in the arrow direction to tighten it.

U500 COMBO_WD4000H_WEB_IB_WASHER-MD_EN(SA).indd 25 2026/3/17 15:34:58

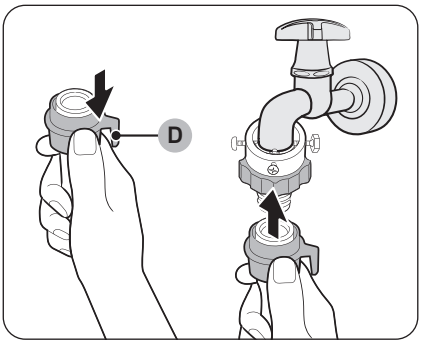

6. While pulling down **part (D)** on the water hose, connect the water hose to the adaptor. Then, release **part (D)**. The hose fits into the adaptor with a clicking sound.

7. To complete connecting the water hose, see 2 and 3 on the "**Connecting to a threaded water tap**" section.

NOTE

- After connecting the water hose to the adaptor, check if it is connected properly by pulling the water hose downwards.
- Use a popular type of water taps. If the tap is square-shaped or too big, remove the spacer ring before inserting the tap into the adaptor.

For models with an additional hot water inlet:

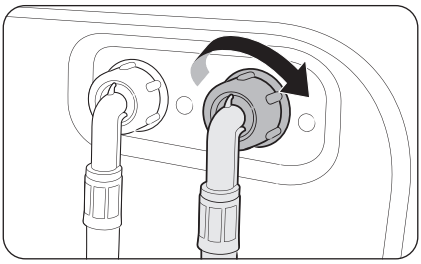

1. Connect the red end of the hot water hose to the hot water inlet on the back of the machine.
2. Connect the other end of the hot water hose to the hot water tap.

U500 COMBO_WD4000H_WEB_IB_WASHER-MD_EN(SA).indd 26 2026/3/17 15:34:58

Check valve (applicable models only)

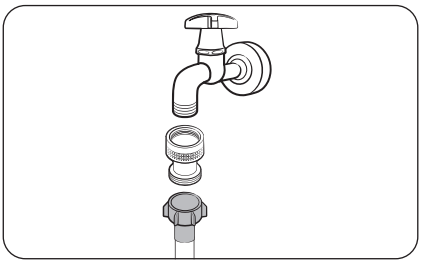

Before connecting the water hose to a water tap, connect the supplied check valve to the water tap and then connect the water hose.

Aqua hose (applicable models only)

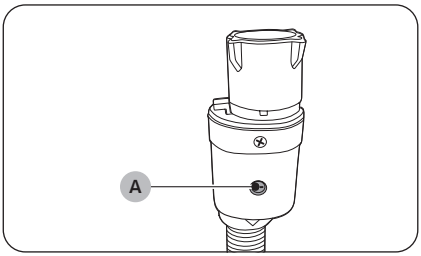

The aqua hose alerts users of a risk of water leaks. It senses the water flow and turns red on the centre **indicator (A)** in case of a leak.

NOTE

The end of the aqua stop hose must be fitted to the water tap and not the machine.

U500 COMBO_WD4000H_WEB_IB_WASHER-MD_EN(SA).indd 27 2026/3/17 15:34:59

STEP 5 Position the drain hose

The drain hose can be positioned in three ways:

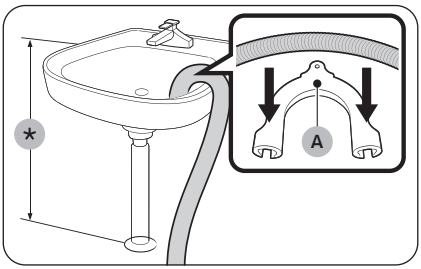

Over the edge of a wash basin

The drain hose must be placed at a height of between 60 cm and 90 cm (*) from the floor. To keep the spout of the drain hose bent, use the supplied **plastic hose guide (A)**. Secure the guide to the wall using a hook to ensure stable drainage.

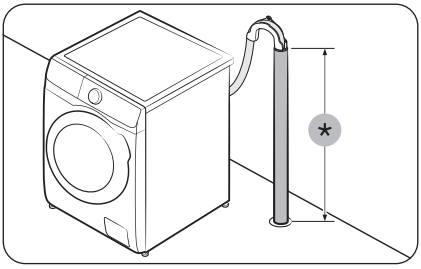

In a drain pipe

The drain pipe should be between 60 cm and 90 cm high (*). It is advisable to use a 65 cm high vertical pipe.

- To ensure the drain hose stays in position, use the plastic hose guide provided (see the figure).
- To prevent the siphoning of water flow during drainage, make sure to insert the drain hose 15 cm in the drain pipe.
- To prevent the drain hose from moving around, secure the hose guide to the wall.

Drain standpipe requirements:

- Minimum diameter of 5 cm
- Minimum carry-away capacity of 60 litres per minute

U500 COMBO_WD4000H_WEB_IB_WASHER-MD_EN(SA).indd 28 2026/3/17 15:34:59

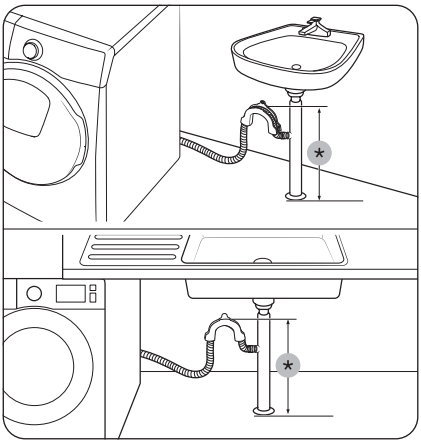

In a sink drain pipe branch

The drain pipe branch mush be above the sink siphone so that the end of the hose is at least 60 cm above the ground.

(*) : 60 cm

⚠ **CAUTION**

Remove the lid on the sink drain pipe branch before connecting the drain pipe to it.

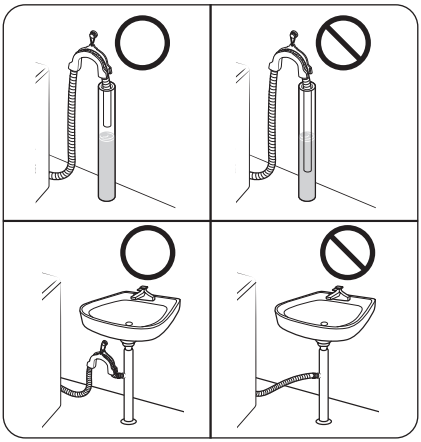

⚠ **CAUTION**

Do not put the drain hose in places of stagnant water or ponding. The water may flow back to the washing machine.

U500 COMBO_WD4000H_WEB_IB_WASHER-MD_EN(SA).indd 29 2026/3/17 15:34:59

Installation

STEP 6 Power on

Plug the power cord into a wall socket that is correctly rated, grounded, and protected by a fuse or circuit breaker. Then, press **Power** to turn on the washing machine.

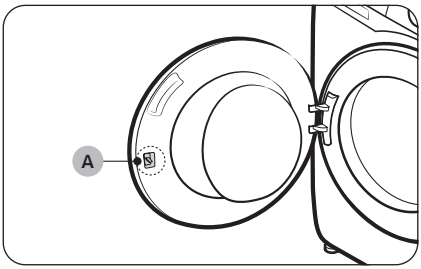

NOTE

Door latch (lever) (A) is originally designed to be slightly loose because it makes the door latch inserting into the door more easily.

NOTE

If the door is locked during installation, plug the power cord, and turn on the power. The door will unlock.

Environment

Please dispose of the packaging materials for this product in an “environmentally friendly” manner. For further detail, please contact your local area authority.

U500 COMBO_WD4000H_WEB_IB_WASHER-MD_EN(SA).indd 30 2026/3/17 15:35:00

Before you start

NOTE

Before doing your laundry for the first time, you must run a complete wash cycle without any items in the drum.

Initial settings

Run Calibration (recommended)

Calibration ensures accurate weight detection by the washing machine. Make sure the drum is empty before running Calibration.

1. Power off, and then power on the washing machine.
2. Hold down **Temp.** and **Options** simultaneously for 3 seconds to enter Calibration mode. The "**Cb**" message appears.
3. Press **Start/Pause** and to run the Calibration cycle.
4. The drum will rotate for about 3 minutes. (The direction of the drum rotation may differ depending on the model.)
5. When the cycle is complete, "**0**" appears on the display and the washing machine will turn off automatically.
6. The washing machine is now ready for use.

Laundry guidelines

STEP 1 Sort

Sort the laundry according to these criteria:

- Care Label: Sort the laundry into cottons, mixed fibres, synthetics, silks, wools, and rayon.
- Colour: Separate whites from colours.
- Size: Mixing different sized items together in the drum improves the washing performance.
- Sensitivity: Wash delicate items separately using an Easy Iron option for pure, new woollen items, curtains, and silk items. Check the labels on the items.

NOTE

Make sure to check the care label on the clothing, and sort them accordingly before starting the wash.

U500 COMBO_WD4000H_WEB_IB_WASHER-MD_EN(SA).indd 31 2026/3/17 15:35:00

Before you start

STEP 2 Empty pockets

Empty all the pockets of your laundry items

- Metal objects such as coins, pins, and buckles on clothing may damage other laundry items as well as the drum.

Turn clothing with buttons and embroideries inside out

- If pants or jacket zippers are open while washing, the drum or clothes may get damaged. Zippers should be closed and fixed with a string.
- Clothing with long strings may become entangled with other clothes. Make sure to tie the strings before starting the wash.

STEP 3 Use a laundry net

- Brassieres (water washable) must be placed in a laundry net. Metal parts of the brassieres may break through and tear other laundry items.
- Small, light clothing such as socks, gloves, stockings, and handkerchiefs may become caught around the door. Place them inside a fine laundry net.
- Do not wash the laundry net by itself without other laundry. This may cause abnormal vibrations that could move the washing machine and result in injury.

STEP 4 Prewash (if necessary)

Select the Prewash option for the selected cycle if the laundry is heavily soiled. When selecting the Prewash option, make sure to put powder-type detergent into the main wash compartment.

STEP 5 Determine the load capacity

Do not overload the washing machine. Overloading may cause the washing machine to not wash properly. For the load capacity for the type of clothing, see page **41**.

NOTE

When washing bedding or bedding covers, the wash time may be lengthened or the spin efficiency may be reduced. For bedding or bedding covers, the recommended maximum spin cycle speed is 800 rpm, and the load capacity is 2.0 kg or less.

CAUTION

- Unbalanced laundry may reduce the spinning performance.
- Do not slam the door. Close the door gently. Otherwise, the door may not be closed properly.

U500 COMBO_WD4000H_WEB_IB_WASHER-MD_EN(SA).indd 32 2026/3/17 15:35:00

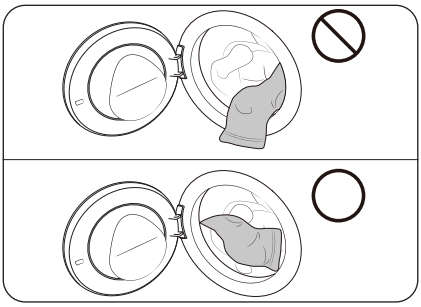

⚠ **CAUTION**

Make sure the laundry is fully inserted in the drum and not caught in the door.

STEP 6 Apply a proper detergent type

The type of detergent depends on the type of fabric (cotton, synthetic, delicate items, wool), colour, wash temperature, and degree of soiling. Always use “low suds” laundry detergent, which is designed for automatic washing machines.

NOTE

- Follow the detergent manufacturer’s recommendations based on the weight of the laundry, the degree of soiling, and the hardness of the water in your local area. If you are not sure about the water hardness, contact a local water authority.
- Do not use detergent that tends to be hardened or solidified. This detergent may remain after the rinse cycle, blocking the drain outlet.
- When using powdered detergent it is recommended that the powder be dissolved in warm water to ensure optimum cleaning results.

⚠ **CAUTION**

When washing wool using the **WOOL/DELICATES** cycle, use only a neutral liquid detergent. If used with the **WOOL/DELICATES** cycle, powder detergent may remain on the laundry and discolour the laundry.

U500 COMBO_WD4000H_WEB_IB_WASHER-MD_EN(SA).indd 33 2026/3/17 15:35:00

Before you start

Laundry capsules

To get the best results from using laundry capsules, please follow these instructions.

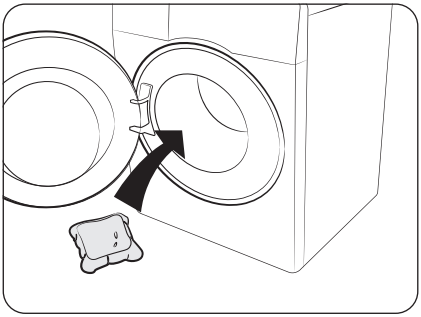

1. Put the capsule in the bottom of the empty drum towards the rear.

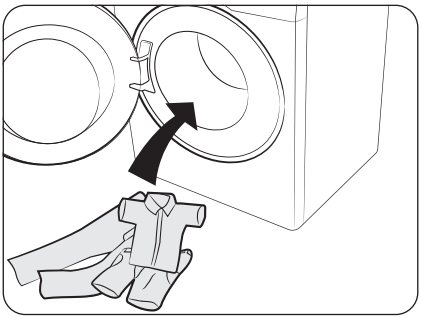

2. Put the laundry in the drum on top of the capsule.

⚠ **CAUTION**

For cycles using cold water or cycles that complete in less than one hour, it is recommended to use a liquid detergent. Otherwise, the capsule may not dissolve completely.

U500 COMBO_WD4000H_WEB_IB_WASHER-MD_EN(SA).indd 34 2026/3/17 15:35:01

Detergent drawer guidelines

The washing machine provides a three-compartment dispenser: the left compartment for the main wash, the centre for fabric softeners, and the right for the preliminary wash.

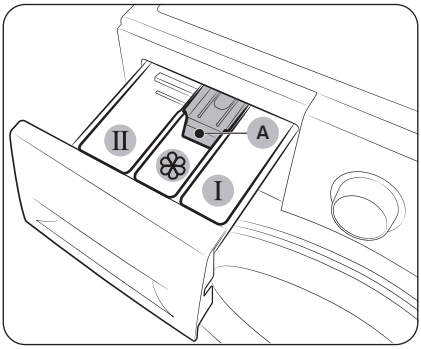

1. I **Prewash compartment**: Apply prewash detergent or starch.
2. II **Main-wash compartment**: Apply main-wash detergent, water softener, soaking detergent, bleach, and/or stain removers.
3. ❀ **Softener compartment**: Apply additives such as fabric softener. Do not exceed the **max line (A)**.

⚠ **CAUTION**

- Do not open the detergent drawer while the washing machine is operating.
- Do not use the following types of detergent:
  - Tablet or capsule types
  - Ball or net types
- To prevent the compartment clogging, concentrated or highly-enriched agents (fabric softener or detergent) must be diluted with water before being applied.
- When Delay End is selected, do not apply detergent directly into the drum. Otherwise, this may discolour the laundry. Use the detergent drawer when Delay End is selected.
- Do not use any cleaning agents for cleaning the drum. Chemical residue in the drum deteriorates the washing performance.
- Be careful not to spill fabric softener on the worktop or the control panel.

U500 COMBO_WD4000H_WEB_IB_WASHER-MD_EN(SA).indd 35 2026/3/17 15:35:01

To apply washing agents to the detergent drawer

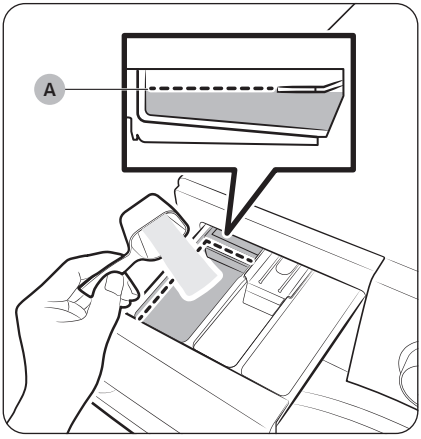

1. Slide open the detergent drawer.
2. Apply laundry detergent to the Ⅱ **main-wash compartment** as instructed or recommended by the manufacturer. To use liquid detergent, see page **38**. Do not exceed the **max line (A)** when adding detergent.

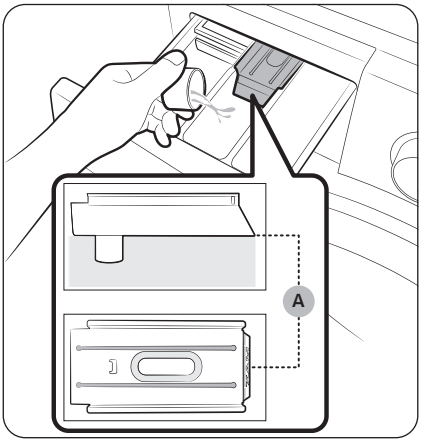

3. Apply fabric softener to the ❀ **softener compartment**. Do not exceed the **max line (A)**. Softener is dispensed into the wash during the final rinse.

U500 COMBO_WD4000H_WEB_IB_WASHER-MD_EN(SA).indd 36 2026/3/17 15:35:01

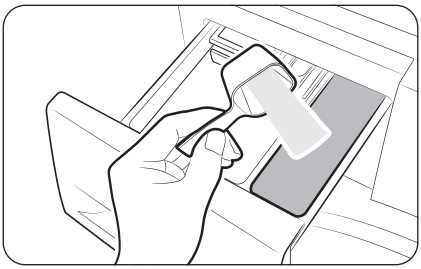

4. If you want to prewash, apply prewash detergent to the Ⅰ **prewash compartment** as instructed or recommended by the manufacturer.
5. Close the detergent drawer.

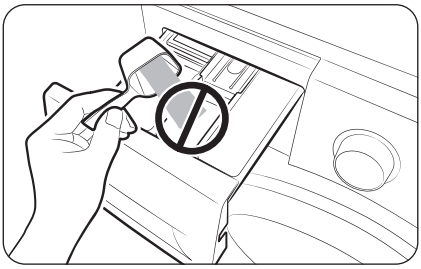

⚠ **CAUTION**

- Do not apply powder detergent to the liquid detergent guide.
- Concentrated fabric softener must be diluted with water before applied.
- Do not apply main-wash detergent to the ❀ **softener compartment**.

U500 COMBO_WD4000H_WEB_IB_WASHER-MD_EN(SA).indd 37 2026/3/17 15:35:02

Before you start

To use liquid detergent (applicable models only)

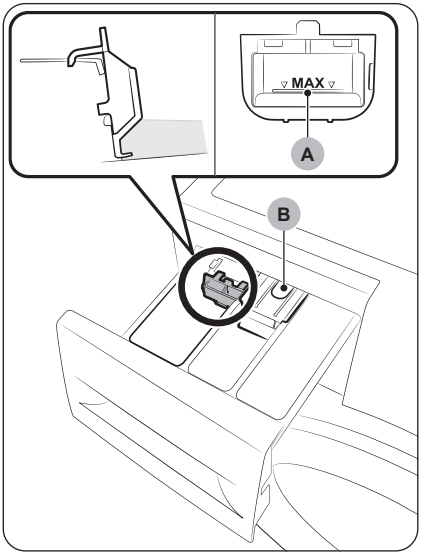

- If the liquid detergent guide is provided separately in the accessories
  - Insert the liquid detergent guide in the Ⅱ **main-wash compartment** before applying liquid detergent.
- If the liquid detergent guide is assembled in the manual dispenser
  - Press down the liquid detergent guide before applying liquid detergent.

NOTE

- Do not exceed the **max line (A)** in the liquid detergent guide when you apply liquid detergent.
- Insert the liquid detergent guide only after you remove the detergent drawer from the washing machine by pressing **release lever (B)**.
- After a wash, some liquid detergent may remain in the detergent drawer.

CAUTION

- Do not use the Prewash function when you use liquid detergent.
- Remove the liquid detergent guide when you use powder detergent.

U500 COMBO_WD4000H_WEB_IB_WASHER-MD_EN(SA).indd 38 2026/3/17 15:35:02

Operations

Control panel

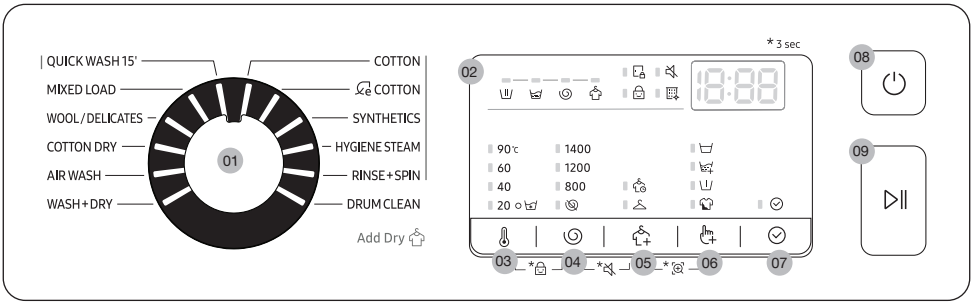

01 Cycle Selector	Turn the dial to select a cycle.
02 Display	The display shows current cycle information and estimated time remaining, or an information code when a problem occurs. **NOTE** The actual washing time may differ from the estimated time initially displayed on the control panel upon cycle selection.
03 Temp.	Press to change the water temperature for the current cycle.
04 Spin	Press to change the spinning speed for the current cycle. • **Rinse Hold** (No indicator): The final rinse process is suspended so that the laundry remains in the water. To unload the laundry, run a drain or spin process. - To use the Rinse Hold option, press **Spin** repeatedly until all the Spin option indicators turn off. • **No Spin**: The drum does not spin after the final drain process. - To use the No Spin option, press **Spin** repeatedly until the option indicator ( ) turns on.
05 Dry Option	Press this button to select proper drying option.
06 Options	Press to select the options. Availability of the options depends on the cycle.
07 Confirm	Press to confirm Operation.
08 Power	Press to turn on/off the washing machine.
09 Start/Pause	Press to start or stop operation.

U500 COMBO_WD4000H_WEB_IB_WASHER-MD_EN(SA).indd 39 2026/3/17 15:35:03

Operations

Simple steps to start

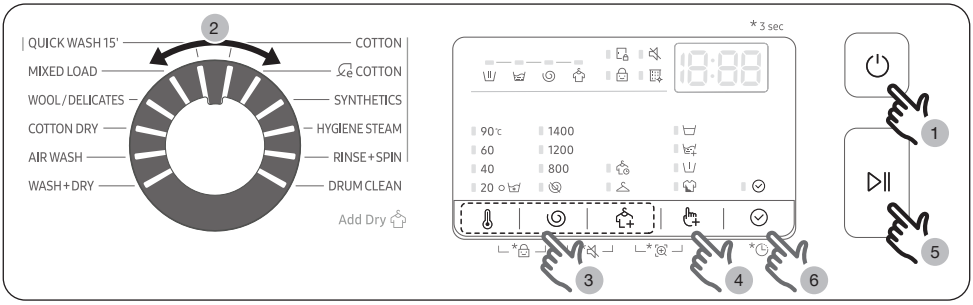

1. Press **Power** to turn on the washing machine.
2. Turn the **Cycle Selector** to select a cycle.
3. Change the cycle settings (**Temp.** , **Spin** , and **Dry Option**) as necessary.
4. To add an option, press the corresponding button.
5. Press **Start/Pause**.
6. Press to confirm cycle.

To change the cycle during operation

1. Press **Start/Pause** to stop operation.
2. Select a different cycle and press **Start/Pause** again.
3. Press to start the new cycle.

Add Garments

To add laundry after the wash starts, use **Start/Pause**.

1. Press **Start/Pause** to stop the wash cycle.
2. Open the door and add the laundry into the drum.
3. Close the door, press **Start/Pause** again.
4. Press to to resume the wash cycle.

U500 COMBO_WD4000H_WEB_IB_WASHER-MD_EN(SA).indd 40 2026/3/17 15:35:03

Cycle overview

Standard cycles

Cycle	Description	Max load (kg)
COTTON	• For cottons, bed linens, table linens, underwear, towels, or shirts. The washing time and the rinse count are automatically adjusted according to the load. • For cleaning lightly soiled cotton items at a nominal temperature of 20 °C.	Max
COTTON	• Optimal performance with lower energy for cotton fabrics, bed linens, table linens, underwear, towels, or shirts. For energy saving, the actual washing temperature may be lower than specified. • E Cotton, Temp 40°C, Rinse 2, Spin 1400, Intensive is recommended for a normally soiled cotton load. Energy and water labelling test programme in accordance with AS/NZS 2040.	Max
SYNTHETICS	• For fabrics that are made of polyester (diolen, trevira), polyamide (perlon, nylon), or the like.	4.0
HYGIENE STEAM	• Cotton and linen fabric which have been in direct contact with the skin, such as underwear. • For optimum hygiene results select a temperature of 60 °C or above. • Steam cycles feature allergy care and bacteria elimination (sterilize).	4.0
RINSE+SPIN	• Featuring an additional rinse process after applying fabric softener to the laundry.	Max
DRUM CLEAN	• Cleans the drum by removing dirt and bacteria from it. • Perform once every 40 washes with no detergent or bleach applied. Notification message appears after every 40 washes. • Make sure the drum is empty. • Do not use any cleaning agents for cleaning the drum.	-
QUICK WASH 15'	• For lightly soiled items in less than 2.0 kg that you want to wash quickly. • Use less than 20 g of detergent. Using more than 20 g of detergent may leave detergent residue. • For liquid detergent, use a maximum of 20 ml of liquid detergent. • Use the High or Extra High spin speed option if load is sensed not so dry at the end of this cycle.	2.0

U500 COMBO_WD4000H_WEB_IB_WASHER-MD_EN(SA).indd 41 2026/3/17 15:35:03

Operations

Cycle	Description	Max load (kg)
MIXED LOAD	• For everyday items such as underwear and shirts.	4.0
WOOL/DELICATES	• Specific for machine-washable wool and delicates fabrics such as sheer fabrics, bras, lingerie (silk), and other handwash-only fabrics. • The WOOL/DELICATES cycle features gentle cradling and soaking to protect fibres from shrinkage/distortion. • A neutral detergent and liquid detergent is recommended.	2.0
COTTON DRY	• For general drying.	6.0
AIR WASH	• This cycle is useful for removing bad odours.	1.0
WASH+DRY	• For cleaning normally soiled cotton items which are declared to be washable at 40 °C or 60 °C, together in the same cycle, and to dry them in such a way that it can be immediately stored in a cupboard. This cycle is used to assess the compliance with the EU Ecodesign legislation for wash and dry.	6.0

Dry Option

Option		Description
	Cupboard dry	• Select to dry laundry automatically by detecting the amount and weight of the laundry. Select this to dry cotton clothing such as cotton trousers, T-shirts, and cotton underwear.
	Time Dry	• Use to dry the laundry for a specified period of time according to the material, load, and moisture.

Options

Option		Description
	Intensive	• For badly soiled laundry. The operation time for each cycle is longer than normal.
	Pre Wash	• This will add a preliminary washing cycle before the main wash cycle.
	Rinse+	• Press this button to add additional rinse cycles.
	Soak	• Press to activate/deactivate the Soak function. This function helps remove a wide variety of stubborn stains.

U500 COMBO_WD4000H_WEB_IB_WASHER-MD_EN(SA).indd 42 2026/3/17 15:35:04

Delay End

You can set the washing machine to finish your wash automatically at a later time, choosing a delay of between 1 to 24 hours (in 1 hour increments). The hour displayed indicates the time the wash will finish.

1. Select a cycle. Then change the cycle settings if necessary.
2. Hold down **Confirm** for 3 seconds. Turn the **Cycle Selector** to select a desired end time.
3. Press **Start/Pause**.
4. Press to confirm Operation.
   The corresponding indicator turns on with the clock running.
5. To cancel the **Delay End**, hold down **Confirm** again.

Real-life case

You want to finish a two-hour cycle 3 hours later from now. For this, you add the Delay End option to the current cycle with the 3-hour setting, and press **Start/Pause** at 2:00 p.m. Then, what happens? The washing machine starts operating at 3:00 p.m., and ends at 5:00 p.m. Provided below is the time line for this example.

Settings

Child Lock

To prevent accidents by children, Child Lock locks all buttons except for **Power**.

- To set the Child Lock function, hold down **Temp.** and **Spin** simultaneously for 3 seconds.
- To release the Child Lock function, hold down **Temp.** and **Spin** simultaneously for 3 seconds.

NOTE

- In the Child Lock state, you must first release the Child Lock if you want to add detergent or laundry.
- Your setting will be kept even after restarting the machine.

Sound

You can turn on or off the sound from the washing machine. Please note that this setting does not affect the sound that notifies information codes.

- To mute the sound, hold down **Spin** and **Dry Option** simultaneously for 3 seconds.
- To unmute the sound, hold down again for 3 seconds.

U500 COMBO_WD4000H_WEB_IB_WASHER-MD_EN(SA).indd 43 2026/3/17 15:35:05

Maintenance

Keep the washing machine clean to prevent deteriorated performance and to preserve its life cycle.

DRUM CLEAN

Perform this cycle regularly to clean the drum by removing bacteria from it. This cycle heats the water between 60 °C and 70 °C, and it also removes accumulated dirt from the rubber door gasket.

1. Press **Power** to turn on the washing machine.
2. Turn the **Cycle Selector** to select **DRUM CLEAN**.
3. Press and hold **Start/Pause**.

NOTE

- The water temperature for **DRUM CLEAN** is set to 70 °C, which cannot be changed.
- It is recommended to run the **DRUM CLEAN** cycle once every 40 washes.
- To prevent limescale, add the proper amount of detergent according to your local water hardness or add a water softener additive together with the detergent.

DRUM CLEAN reminder

Depending on the model, the **DRUM CLEAN** reminder is either an icon or an LED.

For icons, the icon lights up on the control panel.

For LEDs, the LED lights up next to **DRUM CLEAN**, or on the option area of the control panel.

- The **DRUM CLEAN** reminder blinks on the control panel once every 40 washes. It is advisable to perform **DRUM CLEAN** regularly.
- When you first see this reminder blinking, you can ignore the reminder for 6 consecutive washes. From the 7th wash, the reminder no longer appears. However, it appears again on the second 40th wash.
- Even after the last process is terminated, the "**0**" message may remain.
- Even if "**0**" does not disappear, the machine operates normally.
- It is recommended to run the cycle regularly for hygienic purposes.

U500 COMBO_WD4000H_WEB_IB_WASHER-MD_EN(SA).indd 44 2026/3/17 15:35:05

Smart check

To enable this function, you must first download the **Samsung Smart Washer** app at the **Play Store** or the **Apple Store**, and install it on a mobile device featuring a camera function.

The Smart Check function has been optimized for Galaxy & iPhone series (applicable models only).

1. When the washing machine detects an issue to check, an information code appears on the display. To enter Smart Check mode, press and hold **Dry Option** and **Options** simultaneously for 3 seconds.
2. The washing machine starts the self-diagnosis procedure and displays an information code if a problem is detected.
3. Run the **Samsung Smart Washer** app on your mobile device, and tap **Smart Check**.
4. Put the mobile device close to the washing machine's display so that the smartphone camera and the washing machine face each other. Then, the information code will be recognised automatically by the app.
5. When the information code is recognised correctly, the app provides detailed information about the problem with applicable solutions.

NOTE

- The function name, Smart Check, may differ depending on the language.
- If the washing machine reflets light on the display, the app may fail to recognize the information code.
- If the app fails to recognize the Smart Check code consecutively, enter the information code manually onto the app screen.

U500 COMBO_WD4000H_WEB_IB_WASHER-MD_EN(SA).indd 45 2026/3/17 15:35:05

Maintenance

Emergency drain

In case of a power failure, drain the water inside the drum before taking out the laundry.

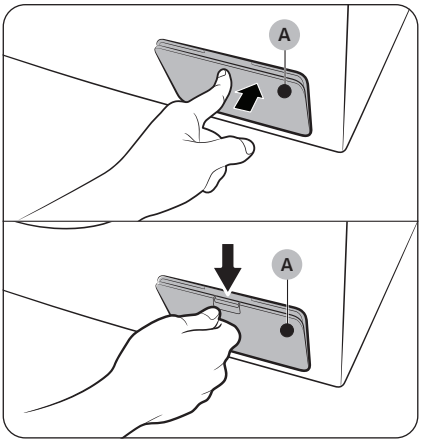

1. Power off and unplug the washing machine from the electrical outlet.
2. Open the **filter cover (A)**.
   - TYPE 1: Gently press the top area of the **filter cover (A)** to open.
   - TYPE 2: Push down the latch of the **filter cover (A)** to open.

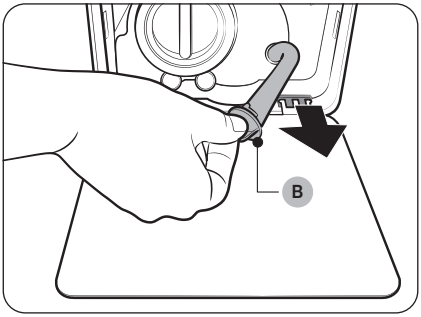

3. Put an empty, spacious container around the cover, and stretch the emergency drain tube to the container while holding the **tube cap (B)**.

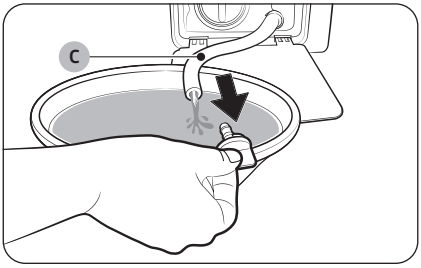

4. Open the tube cap and let water in the **emergency drain tube (C)** flow into the container.
5. When done, close the tube cap, and reinsert the tube. Then, close the filter cover.

NOTE

Use a spacious container because the water in the drum may be more than expected.

U500 COMBO_WD4000H_WEB_IB_WASHER-MD_EN(SA).indd 46 2026/3/17 15:35:05

Cleaning

Surface of the washing machine

Use a soft cloth with a nonabrasive household detergent. Do not spray water onto the washing machine.

Mesh filter

Clean the mesh filter of the water hose once or twice a year.

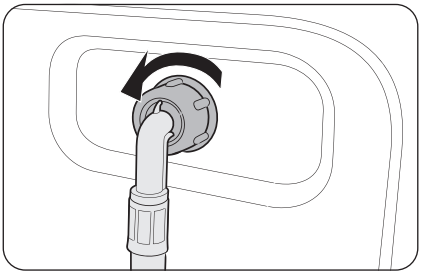

1. Turn off the washing machine, and unplug the power cord.
2. Close the water tap.
3. Loosen and disconnect the water hose from the back of the washing machine. Cover the hose with a cloth to prevent water from gushing out.

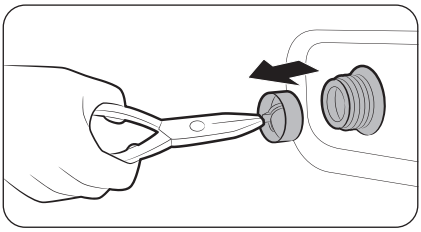

4. Use pliers to pull out the mesh filter from the inlet valve.
5. Submerge the mesh filter deeply in water so that the threaded connector is also submerged.
6. Dry the mesh filter completely in the shade.
7. Reinsert the mesh filter into the inlet valve, and reconnect the water hose to the inlet valve.
8. Open the water tap.

NOTE

If the mesh filter is clogged, an information code of “**4C**” appears on the screen.

U500 COMBO_WD4000H_WEB_IB_WASHER-MD_EN(SA).indd 47 2026/3/17 15:35:06

Maintenance

Debris filter

It is advisable to clean the debris filter every 2 months to prevent its clogging. A clogged debris filter may reduce the bubble effect.

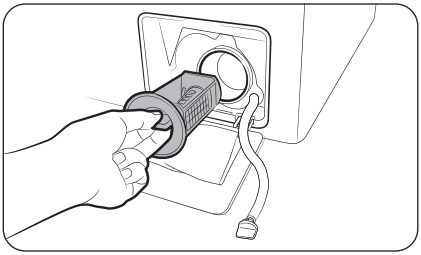

1. Turn off the washing machine, and unplug the power cord.
2. Drain the remaining water inside the drum. See the "**Emergency drain**" section.
3. Open the **filter cover**.
   - TYPE 1: Gently press the top area of the **filter cover** to open.
   - TYPE 2: Push down the latch of the **filter cover** to open.
4. Turn the debris filter knob to the left, and drain off the remaining water.

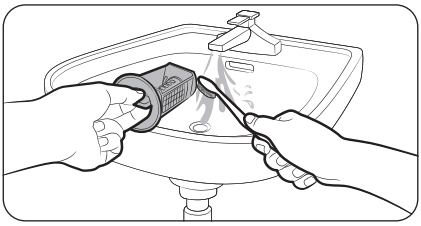

5. Clean the debris filter using soft brushes. Make sure the drain pump propeller inside the filter is unclogged.
6. Reinsert the debris filter, and turn the filter knob to the right.

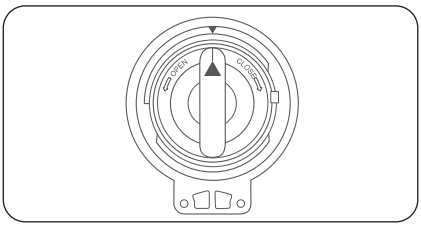

NOTE

- Some debris filters feature a safety knob that is designed to prevent accidents by children. To open the safety knob of the debris filter, push in and turn it anticlockwise. The spring mechanism of the safety knob helps open the filter.
- To close the safety knob of the debris filter, turn it clockwise. The spring makes a rattling sound, which is normal.

NOTE

If the debris filter is clogged, an information code of "**5C**" appears on the screen.

CAUTION

- Make sure the filter knob is closed properly after cleaning the filter. Otherwise, this may cause a leak.
- Make sure the filter is inserted properly after cleaning it. Otherwise, this may cause an operational failure or a leak.

U500 COMBO_WD4000H_WEB_IB_WASHER-MD_EN(SA).indd 48 2026/3/17 15:35:06

Detergent drawer

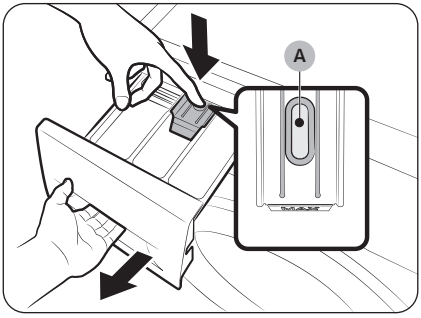

1. While holding down the **release lever (A)** on the inner of the drawer, slide open the drawer.
2. Remove the release lever and the liquid detergent guide from the drawer.

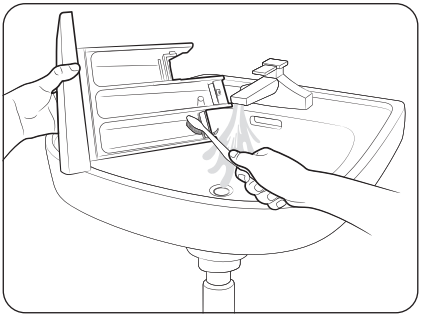

3. Clean the drawer components in flowing water using a soft brush.

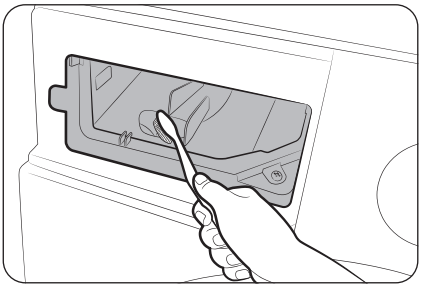

4. Clean the drawer recess using a bottle brush to remove detergent residues and limescale on the drawer recess.
5. Reinsert the release lever and the liquid detergent guide to the drawer.
6. Slide the drawer inward to close it.

NOTE

To remove remaining detergent, perform the **RINSE+SPIN** cycle with the drum being empty.

U500 COMBO_WD4000H_WEB_IB_WASHER-MD_EN(SA).indd 49 2026/3/17 15:35:07

Maintenance

Recovery from freezing

The washing machine may freeze when it drops below 0 °C.

1. Turn off the washing machine, and unplug the power cord.
2. Pour warm water over the water tap to loosen the water hose.
3. Disconnect the water hose, and soak it in warm water.
4. Pour warm water into the drum and leave it for about 10 minutes.
5. Reconnect the water hose to the water tap.

NOTE

If the washing machine still doesn't operate normally, repeat the above steps until it operates normally.

Care against an extended time of disuse

Avoid leaving the washing machine unused for an extended time. If this is the case, drain the washing machine and unplug the power cord.

1. Turn the **Cycle Selector** to select a **RINSE+SPIN**.
2. Empty the drum, and press **Start/Pause**.
3. When the cycle is complete, close the water tap and disconnect the water hose.
4. Turn off the washing machine, and unplug the power cord.
5. Open the door to let air circulate through the drum.

U500 COMBO_WD4000H_WEB_IB_WASHER-MD_EN(SA).indd 50 2026/3/17 15:35:07

Troubleshooting

Checkpoints

If you encounter a problem with the washing machine, first check the table below and try the suggestions.

Problem	Action
Does not start.	• Make sure the washing machine is plugged in. • Make sure the door is properly closed. • Make sure the water taps are open. • Make sure to press or tap **Start/Pause** to start the washing machine. • Make sure Child Lock is not activated. • Before the washing machine starts to fill, it will make a series of clicking noises to check the door lock and does a quick drain. • Check the fuse or reset the circuit breaker.
Water supply is insufficient, or no water is supplied.	• Fully open the water tap. • Make sure the door is properly closed. • Make sure the water supply hose is not frozen. • Make sure the water supply hose is not kinked or clogged. • Make sure there is sufficient water pressure. • Make sure the mesh filter of the water supply hose is clean.
After a cycle, detergent remains in the detergent drawer.	• Make sure the washing machine is running with sufficient water pressure. • Make sure the detergent is added to the centre of the detergent drawer. • Make sure the rinse cap is inserted properly. • If using granular detergent, make sure the detergent selector is in the upper position. • Remove the rinse cap and clean the detergent drawer.
Excessive vibrations or makes noise.	• Make sure the washing machine is installed on a level, solid floor that is not slippery. If the floor is not level, use the levelling feet to adjust the height of the washing machine. • Make sure the shipping bolts are removed. • Make sure the washing machine is not contacting any other object. • Make sure the laundry load is balanced. • The motor can cause noise during normal operation. • Overalls or metal-decorated clothes can cause noise while being washed. This is normal. • Metal objects such as coins can cause noise. After washing, remove these objects from the drum or filter case.

U500 COMBO_WD4000H_WEB_IB_WASHER-MD_EN(SA).indd 51 2026/3/17 15:35:07

Troubleshooting

Problem	Action
Does not drain and/ or spin.	• Make sure the drain hose is straight all the way to the drain system. If you encounter a drain restriction, call for service. • Make sure the debris filter is not clogged. • Close the door and press or tap **Start/Pause**. For your safety, the washing machine will not tumble or spin unless the door is closed. • Make sure the drain hose is not frozen or clogged. • Make sure the drain hose is connected to a drain system that is not clogged. • If the washing machine is not supplied with sufficient power, the washing machine temporarily will not drain or spin. As soon as the washing machine regains sufficient power, it will operate normally. Spinning does not work. • Make sure laundry is spread out evenly. • Make sure the washing machine is on a flat, stable surface. • Redistribute the load. If only one item of clothing needs washing, such as a bathrobe or pair of jeans, the final spin result might be unsatisfactory, and an "**Ub**" check message will be shown in the display.
The door does not open.	• Press or tap **Start/Pause** to stop the washing machine. • It may take a few moments for the door lock mechanism to disengage. • The door will not open until 3 minutes after the washing machine has stopped or the power turned off. • Make sure all the water in the drum is drained. • The door may not open if water remains in the drum. Drain the drum and open the door manually. • Make sure the door lock light is off. The door lock light turns off after the washing machine has drained.
Excessive suds.	• Make sure you use the recommended types of detergent as appropriate. • Use high efficiency (HE) detergent to prevent oversudsing. • Reduce the detergent amount for soft water, small loads, or lightly soiled loads. • Non-HE detergent is not recommended.
Cannot apply additional detergent.	• Make sure the remaining amount of detergent and fabric softener is not over the limit.

U500 COMBO_WD4000H_WEB_IB_WASHER-MD_EN(SA).indd 52 2026/3/17 15:35:07

Problem	Action
Stops.	• Plug the power cord into a live electrical outlet. • Check the fuse or reset the circuit breaker. • Close the door and press the **Start/Pause** button to start the washing machine. For your safety, the washing machine will not tumble or spin unless the door is closed. • Before the washing machine starts to fill, it will make a series of clicking noises to check the door lock and does a quick drain. • There may be a pause or soak period in the cycle. Wait briefly and the washing machine may start. • Make sure the mesh filter of the water supply hose at the water taps are not clogged. Periodically clean the mesh filter. • If the washing machine is not supplied with sufficient power, the washing machine temporarily will not drain or spin. As soon as the washing machine regains sufficient power, it will operate normally.
Fills with the wrong water temperature.	• Fully open both taps. • Make sure the temperature selection is correct. • Make sure the hoses are connected to the correct taps. Flush water lines. • Make sure the water heater is set to supply a minimum 120 °F (49 °C) hot water at the tap. Also, check the water heater capacity and recovery rate. • Disconnect the hoses and clean the mesh filter. The mesh filter may be clogged. • While the washing machine fills, the water temperature may change as the automatic temperature control feature checks incoming water temperature. This is normal. • While the washing machine fills, you may notice just hot and/or just cold water going through the dispenser when cold or warm temperatures are selected. This is a normal function of the automatic temperature control feature as the washing machine determines the water temperature.
Load is wet at the end of a cycle.	• Use the High or Extra High spin speed. • Use high efficiency (HE) detergent to reduce oversudsing. • Load is too small. Small loads (one or two items) may become unbalanced and not spin completely. • Make sure the drain hose is not kinked or clogged.

U500 COMBO_WD4000H_WEB_IB_WASHER-MD_EN(SA).indd 53 2026/3/17 15:35:07

Troubleshooting

Problem	Action
Leaks water.	• Make sure the door is properly closed. • Make sure all hose connections are tight. • Make sure the end of the drain hose is correctly inserted and secured to the drain system. • Avoid overloading. • Use high efficiency (HE) detergent to prevent oversudsing. • Check if there is something stuck between the door and the diaphragm. - If there is something stuck between the door and the diaphragm, it may cause a leak or damage to the diaphragm.
Has odours.	• Excessive suds collect in recesses and can cause foul odours. • Run cleansing cycles to sanitize periodically. • Clean the door seal (diaphragm). • Dry the washing machine interior after a cycle has finished.
No bubbles are seen (Bubble models only).	• Overloading may screen bubbles. • Severely contaminated laundry may not generate bubbles.
Increased time of washing	• The actual washing time may differ from the estimated time initially displayed on the control panel upon cycle selection.
Stains on the clothes.	• Do not pour fabric softener directly onto your clothes. Applying it directly to clothing can leave stains (for example, oily spots or ingrained dirt) that might be difficult to remove.

- If a problem persists, contact a service center.

U500 COMBO_WD4000H_WEB_IB_WASHER-MD_EN(SA).indd 54 2026/3/17 15:35:07

Information codes

If the washing machine fails to operate, you may see an information code on the screen. Check the table below and try the suggestions.

Code	Action
4C	Water is not supplied. • Make sure the water taps are open. • Make sure the water hoses are not clogged. • Make sure the water taps are not frozen. • Make sure the washing machine is running with sufficient water pressure. • Make sure that the cold water tap and the hot water tap are properly connected. • Clean the mesh filter as it may be clogged. • When the "**4C**" message appears, the machine drains water for 3 minutes. In the meantime, the power button will be disabled.
4C2	• Make sure the cold water supply hose is firmly connected to the cold water tap. If it is connected to the hot water tap, the laundry may be deformed with some cycles.
5C	Water is not draining. • Make sure the drain hose is not frozen or clogged. • Make sure the drain hose is positioned correctly, depending on the connection type. • Clean the debris filter as it may be clogged. • Make sure the drain hose is straightened all the way to the drain system. • If the information code remains, contact a customer service centre.
dC	Operating the washing machine with the door open. • Make sure the door is properly closed. • Make sure laundry is not caught in the door.
OC	Water is overflowed. • Restart after spinning. • If the information code remains on the display, contact a local Samsung service centre.
LC, LC1	Check the drain hose. • Make sure the end of the drain hose is not placed on the floor. • Make sure the drain hose is not clogged. • If the information code remains, contact a customer service centre.
3C	Check the motor for operation. • Try restarting the cycle. • If the information code remains, contact a customer service centre.

U500 COMBO_WD4000H_WEB_IB_WASHER-MD_EN(SA).indd 55 2026/3/17 15:35:07

Troubleshooting

Code	Action
UC	The electronic control needs to be checked. • Check if power is supplied properly. • If the information code remains, contact a customer service centre.
	Low voltage detected. • Check if the power cord is plugged in. • If the information code remains, contact a customer service centre.
HC	High temperature heating check. • If the information code remains, contact a customer service centre.
1C	The Water Level sensor is not working properly. • Try power off and restarting the cycle. • If the information code remains, contact a customer service centre.
AC	Check communications between main and sub PBAs. • Try power off and restarting the cycle. • If the information code remains, contact a customer service centre.
0	The machine does not turn off automatically after the last spinning process, and the "**0**" message remains. • The machine operates normally without running the **DRUM CLEAN** cycle. However, it is recommended to run the cycle for hygienic purposes.
Ub	Spinning does not work. • Make sure laundry is spread out evenly. • Make sure the washing machine is on a flat, stable surface. • Redistribute the load. If only one item of clothing needs washing, such as a bathrobe or pair of jeans, the final spin result might be unsatisfactory, and an "**Ub**" check message will be shown in the display.

If any information code keeps appearing on the screen, contact a local Samsung service centre.

U500 COMBO_WD4000H_WEB_IB_WASHER-MD_EN(SA).indd 56 2026/3/17 15:35:07

Specifications

Fabric care chart

The following symbols provide garment care direction. The Clothing care labels include symbols for drying, bleaching, drying and ironing, or dry cleaning when necessary. The use of symbols ensures consistency among garment manufacturers of domestic and imported items.

Follow care label directions to maximize garment life and reduce laundering problems.

Washing

95	95 °C normal wash.
60	60 °C normal wash.
60	60 °C mild wash.
40	40 °C normal wash.
40	40 °C mild wash.
40	40 °C very mild wash.
30	30 °C normal wash.
30	30 °C mild wash.
30	30 °C very mild wash.
	Hand wash.
	Do not wash.

NOTE

The numbers in the wash tub specify the maximum washing temperatures in degrees celsius which must not be exceeded.

Bleaching

	Any bleach allowed.
	Only oxygen bleach allowed.
	Do not bleach.

Drying

	Tumble drying / normal temperture / maximum exhaust temperatue 80 °C.
	Tumble drying / lower temperature / maximum exhaust temperature 60 °C.
	Do not tumble dry
	Line drying.
	Drip line drying.
	Flat drying.
	Drip flat drying.
	Line drying in the shade.
	Drip line drying in the shade.
	Flat drying in the shade.
	Drip flat drying in the shade.

NOTE

- The dots indicate the drying level of the dryer.
- The lines indicate the type and place of the drying.

U500 COMBO_WD4000H_WEB_IB_WASHER-MD_EN(SA).indd 57 2026/3/17 15:35:42

Specifications

Ironing

	Iron at maximum sole plate temperature of 200 °C.
	Iron at maximum sole plate temperature of 150 °C.
	Iron at maximum sole plate temperature of 110 °C. Caution when using steam irons (work without steam).
	Do not iron.

NOTE

The dots indicate the temperature ranges for ironing (regulator, steam, travel irons and ironing machines).

Professional care

P	Professional dry-cleaning in perchloroethylene and/or hydrocarbons (heavy benzines) with normal process.
P	Professional dry-cleaning in perchloroethylene and/or hydrocarbons (heavy benzines) with gentle process.
F	Professional dry-cleaning in hydrocarbons (heavy benzines) with normal process.
F	Professional dry-cleaning in hydrocarbons (heavy benzines) with gentle process.
	Do not dry-clean.
W	Professional wet-cleaning.
W	Mild professional wet-cleaning.
W	Very mild professional wet-cleaning.
W	Do not wet-clean.

NOTE

- The letters in a circle indicate the solvents (P, F) used in dry cleaning or wet cleaning (W).
- Generally, the line under the symbol indicates a milder treatment (e.g. gentle cycle for easy-care items). The double line indicates care levels with particularly gentle treatment.

U500 COMBO_WD4000H_WEB_IB_WASHER-MD_EN(SA).indd 58 2026/3/17 15:35:44

Protecting the environment

- This appliance is manufactured from recyclable materials. If you decide to dispose of it, please observe local waste disposal regulations. Cut off the power cord so that the appliance cannot be connected to a power source. Remove the lid so that animals and small children cannot get trapped inside the appliance.
- Do not exceed the detergent quantities recommended in the detergent manufacturers' instructions.
- Use stain removal products and bleaches before the wash cycle only when necessary.
- Save water and electricity by only washing full loads (the exact amount depends upon the program used).

Specification sheet

" * " Asterisk(s) means variant model and can be varied (0-9) or (A-Z).

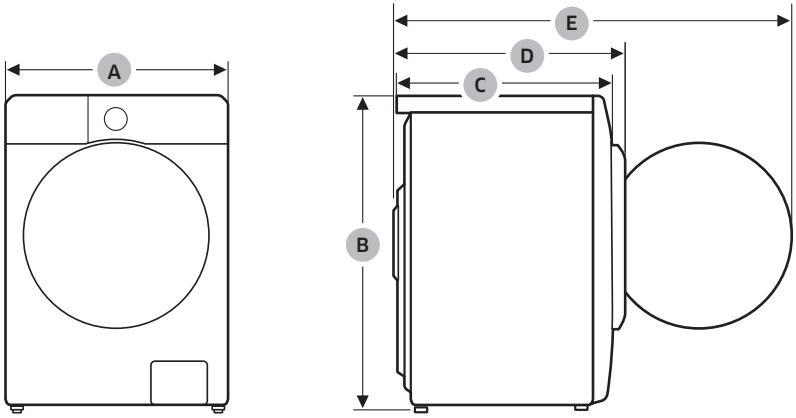

U500 COMBO_WD4000H_WEB_IB_WASHER-MD_EN(SA).indd 59 2026/3/17 15:35:44

Specifications

Type			Front loading washing machine
Model name			WD90HG4*****
Dimensions		A (Width)	600 mm
		B (Height)	850 mm
		C (Depth)	590 mm
		D	645 mm
		E	1085 mm
Water pressure			50-800 kPa
Net weight			69.0 kg
Maximum load capacity		Washing and spinning	9.0 kg
		Drying	6.0 kg
Power consumption	Washing and heating	AC 220-240 V / 50 Hz	1900-2300 W
	Dry		1600-1900 W
Spin revolutions			1400 rpm

NOTE

- The design and specifications are subject to change without notice for quality improvement purposes.
- The dimensions stated here may differ slightly from the actual measurements depending on the measuring method.

U500 COMBO_WD4000H_WEB_IB_WASHER-MD_EN(SA).indd 60 2026/3/17 15:35:44

SAMSUNG

QUESTIONS OR COMMENTS?

COUNTRY	CALL	OR VISIT US ONLINE AT
AUSTRALIA	1300 362 603 (Other)	www.samsung.com/au/support
NEW ZEALAND	0800 726 786 (All Product)	www.samsung.com/nz/support