SEIKI

7.5KG FRONT LOAD WASHING MACHINE

INSTRUCTION MANUAL

MODEL: SC-750AU8FL

Please read this manual carefully before using, and keep it for future reference.

CONTENTS

General Safety	4
Product Overview	8
Getting Started	10
Levelling the appliance	11
Connecting the water inlet hose	12
Connecting the Drain Hose	13
Instructions	15
Operations	18
Cleaning and Maintenance	21
FAQs	25
Specifications	26
Customer Helpline	28

GENERAL SAFETY

IMPORTANT INFORMATION

Read this manual thoroughly before you start using the Front Load Washing Machine.

The safety precautions instructions reduces the risk of fire, electric shock and injury when correctly complied to.

Please follow all instructions and take notice of all warnings.

Pay close attention to messages that follow this safety alert symbol or the words **DANGER**, **WARNING** or **CAUTION**. These words will be used to alert you of potential hazards that and injure you and others. Following these instruction will tell you how to reduce the chance of injury and the possible dangers if instructions aren't followed.

WARNING

This symbol indicates when there is a serious risk of injury if you do not pay attention to the warnings.

CAUTION

This symbol indicates when to be careful to avoid a serious risk of injury to oneself or damage to property.

GENERAL SAFETY INSTRUCTIONS (Cont.)

ELECTRICAL SAFETY

- **Voltage:** Plug the appliance to a 220-240V, 50Hz, properly earthed power outlet, it must be in good working order.
- **Power connection:** Do not use an adaptor or an extension cord. Plug the power plug directly into a separate power point that cannot be accidentally turned off, and that is easily accessible so you can switch it off if needed.
- **Power cord:** Do not kink or damage the power supply cord. Make sure it is behind the appliance so no one can step on or place anything on the power supply cord or against it. A damaged power plug may overheat and cause a fire.
- **Damaged cord:** Do not use a cord that shows cracks or damage. Any damage to the cord may cause a short circuit, fire and/or electric shock. Contact our support centre on 1300 296 699 for advice
- **Disconnection:** Never pull the power cord to unplug appliance. Grip the plug and pull straight out from the power point.
- **Electrical work:** If the installation of this appliance requires any electrical work, make sure it is carried out by an electrician.

To reduce risk of fire, electric shock or injury, always follow these basic precautions and accident prevention measures when using this appliance, including the below:

NOTE: This appliance should be installed by an authorised technician else warranty will be void.

INSTALLATION

- The product is heavy, be careful when moving it. To avoid back or other injury, have 2 people lift or mechanical aid when installing.
- When unboxing, thoroughly inspect the appliance carefully for any damage. If there is any damage, do not install the appliance. Contact our support centre on 1300 296 699 for advice.
- While installing the appliance make sure that the power cord is not bent or flattened.
- Make sure to remove all packaging materials such as foams and tapes before installing the appliance.
- Make sure if the machine is to be placed on carpet that the ventilation openings in the base are not obstructed
- Install the washing machine on a flat level and stable ground.

GENERAL SAFETY INSTRUCTIONS (Cont.)

USAGE CONDITIONS AND RESTRICTIONS

- Supervision over children is to ensure that they do not play with the appliance. Never allow them to use, play with or crawl inside the appliance. Cleaning and maintenance must not be done by children.
- This appliance is not to be used by persons (including children) with reduced physical, sensory or mental capabilities, or lack of experience and knowledge, unless they are being supervised or been given instructions on how to use of the appliance in a safe way and understand the hazards with using this appliance incorrectly.
- Only for indoor domestic use only. It is not to be used for industrial or commercial use.
- Do not use this product for anything other than its intended purpose, and only use it as described in this manual. Do not attempt to alter or modify this appliance.
- In the process of a hot wash, the door window can become hot. Make sure not to touch it or that no children or pets come into contact with the door window.
- Ensure that emptying all pockets of every item to make sure that there is no hard, sharp objects such as coins, safety pins, bra wires, nails or screws can cause damage to the appliance and has a chance to block the pump.
- Damage or malfunction caused from foreign objects is not covered by your warranty to the appliance.
- Do not operate this appliance outdoors.
- Incorrect use can result in property damage, injury or death. We assume no liability for misuse of the appliance or noncompliance with these instructions.
- Maximum load of dry clothes is 7.5kg

GENERAL SAFETY INSTRUCTIONS (Cont.)

CLEANING AND MAINTENANCE

- Before cleaning or maintenance, always unplug the appliance from the power socket. Make sure you pull by the plug, not the cord as this can damage the power cord and cause a hazard.
- Only the filter requires regular cleaning, everything else is non user-serviceable parts. Do not try to repair, disassemble or modify the appliance.
- Check and clean the lint filter on a regular basis
- **Service:** Never try to repair, modify or replace any part of the appliance, unless this manual says you can do so. All other servicing is to be done by a qualified technician, or contact our support centre on 1300 296 699 for advice.

PRODUCT OVERVIEW

Detergent Box

Detergent Drawer

Control Panel

Power Plug

Door

Outlet Hose

Accessories

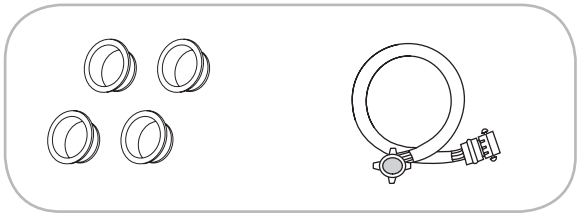

Transport Hole Plug

Inlet Pipe C

PRODUCT OVERVIEW (Cont.)

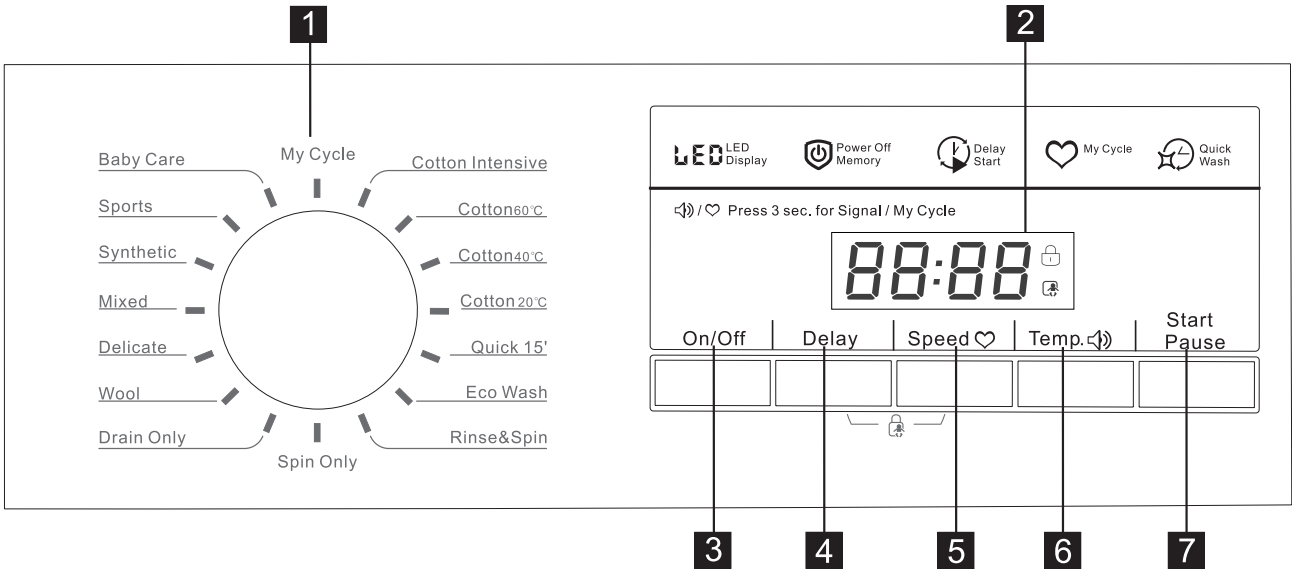

CONTROL PANEL

1. Program knob
2. LED Screen display
3. On/Off button
4. Delay button
5. Speed button
6. Temperature button
7. Start/Pause button

There are 16 types of washing selection functions in display. For example:

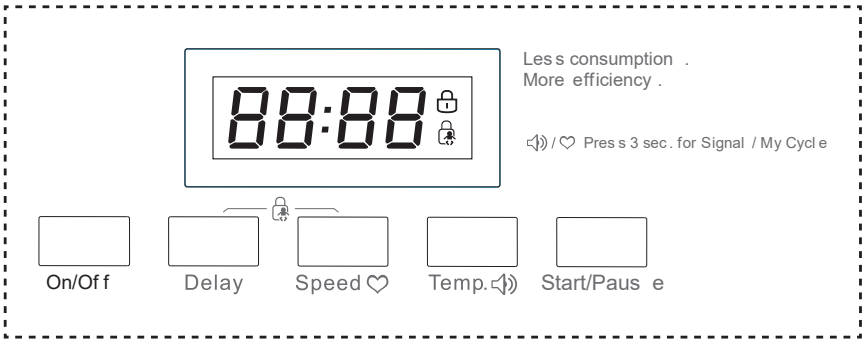

- **Cotton intensive:** With the corresponding temperature selections: 20, 30, 40, 60, 90°C, Cold
- **Cotton 60 °C;** Cotton 40 °C; Cotton 20 °C;
- **Quick15':** 20, 30 , 40°C, Cold
- **Eco Wash : 20,30,40 °C,Cold**
- **Rinse&Spin: -**
- **Spin only: -**
- **Drain only: -**
- **Wool: 20 , 30,40 °C,Cold**
- **Delicate: 20,30°C, Cold**
- **Mixed: 20, 30,40°C,Cold**
- **Synthetic: 20, 30, 40, 60 °C, Cold**
- **Sports: 20, 30,40°C, Cold**
- **Baby care:**20, 30,40,60,90 °C, Cold
- **My cycle**

Note: The Control panel line chart is for reference only,Please refer to real productas standard.
The Control panel could be changed without written notice. Please visit the website of Washing Machine or call up the service line for consultation

GETTING STARTED

Before installing your appliance, read all safety instructions in this manual, especially the sections on electrical safety and installation.

UNPACKING

- When unpacking the appliance, be sure to keep all the packaging materials until you have made sure your new appliance is undamaged and in good working order. Plastic can be a suffocation hazard for babies and young children, make sure the materials are out of their reach.

TRANSPORTATION

- **CAUTION: VERY HEAVY!** Be sure to team lift the appliance with someone or mechanical aid is required when moving the appliance. Keep the appliance upright as possible when moving the appliance.

REMOVE TRANSPORT BOLTS

- **IMPORTANT!** Make sure before you install the appliance, you must remove the transit bolts from the back of the appliance and cover the holes with the hole covers provided. A spanner is required to remove the bolts.

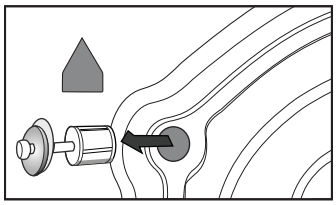

NOTE: Keep the transit bolts for future needs if you are going to move the appliance again to another location. **The bolts hold the drum in place during transportation but MUST be removed before use so the drum can move during a wash. Leaving the bolts in can result in strong shock, noise and malfunction.**

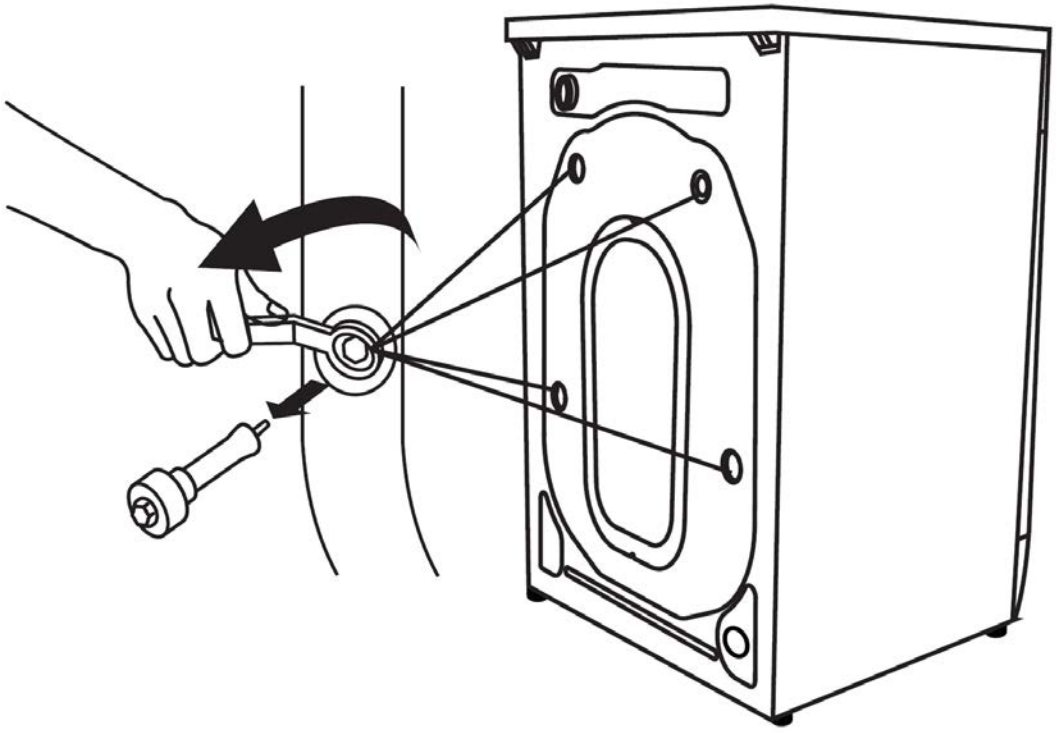

GETTING STARTED (Cont.)

LEVELLING THE APPLIANCE

IMPORTANT! Make sure to level the appliance carefully with a spirit level to ensure the most accurate levelling of the appliance. This is a must if your floor in unbalanced to level the washing machine.

- Make sure to position the appliance on a level and stable ground. If the floor is uneven you can adjust the feet by twisting foot then with a spanner you twist the lock nut to the top to lock it in place.

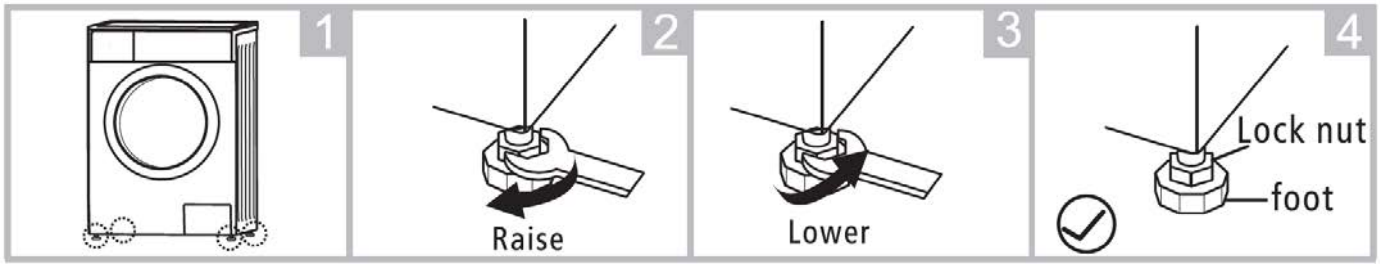

- By placing a spirit level on top of the appliance you can check correctly to aid you in adjusting the feet levelling nuts to adjust the appliance to be completely level.

INSTALLATION AREA

IMPORTANT! When installing the appliance the spacing on the side and behind the appliance must not be less the 20mm to allow proper ventillation.

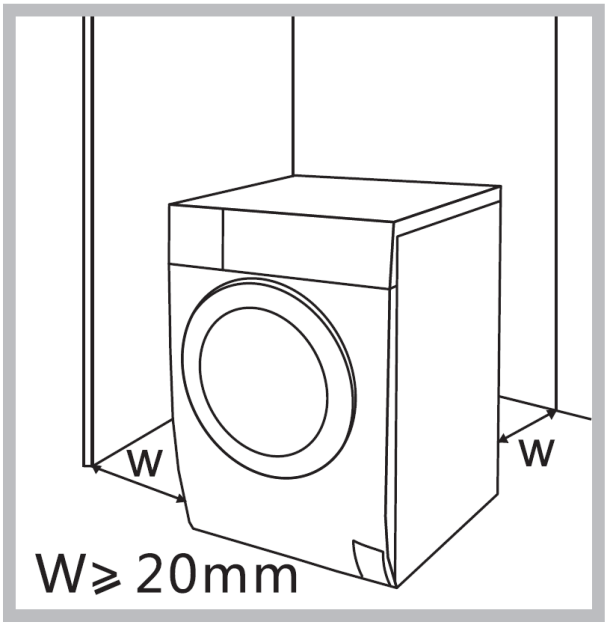

Note: Make sure to avoid direct sunlight onto the appliance.

GETTING STARTED (Cont.)

CONNECTING THE WATER INLET HOSE

IMPORTANT! To prevent leakage or water damage please follow the below instructions. Do not kink, crush, modify or sever the water inlet hose.

Minimum Inlet Water Pressure: 0.05MPa/**Maximum Inlet Water Pressure:** 1MPa

Be sure to only use new hose sets when connecting the washing machine. Do not re-use old hoses.

CONNECT THE INLET PIPE

Connect the inlet pipe as indicated in the figure. For the model which has hot valve , please connect the hot vale to hot water tap. Energy will decrease automatically for some program.

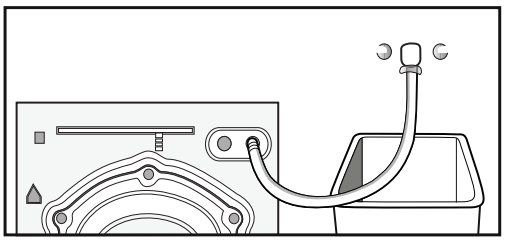

INSTALL INLET PIPE

1. Connect the elbow to tap and fasten it clockwise.
2. Connect the other end of inlet pipe to the inlet valve at the backside of washing machine and fasten the pipe tightly clockwise.

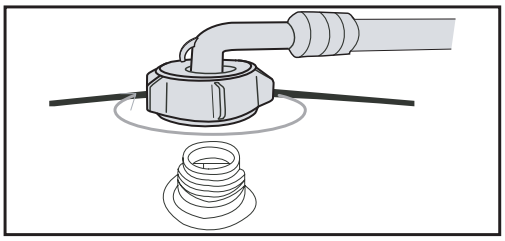

Notes: If there is any leakage with hose after connecting, then repeat the steps to connect inlet pipe. The most common type of tap shall be used to supply water. If the tap is square or too big, then the tap should be changed to a standard one.

PLACE OUTLET HOSE

There are two ways to place the end of outlet hose:

1. Put it beside the water trough.

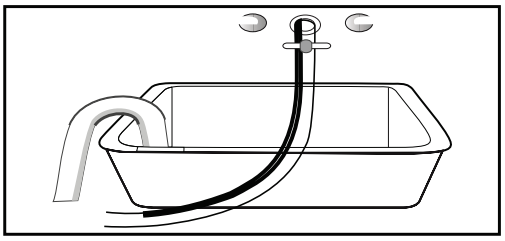

HOLE PLUG

This Hole plug is used to jam the hole on the back cabinet.

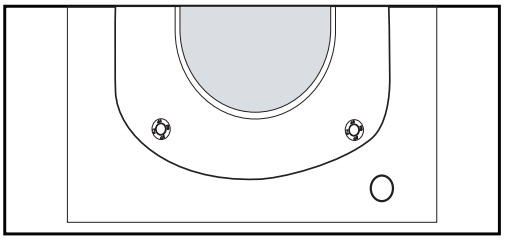

GETTING STARTED (Cont.)

CONNECTING THE DRAIN HOSE

Do not kink or protract the drain hose. Position the drain hose correctly otherwise damage will result in water leakage.

There are two ways to place the end of drain hose:

1. Put it through the water trough.

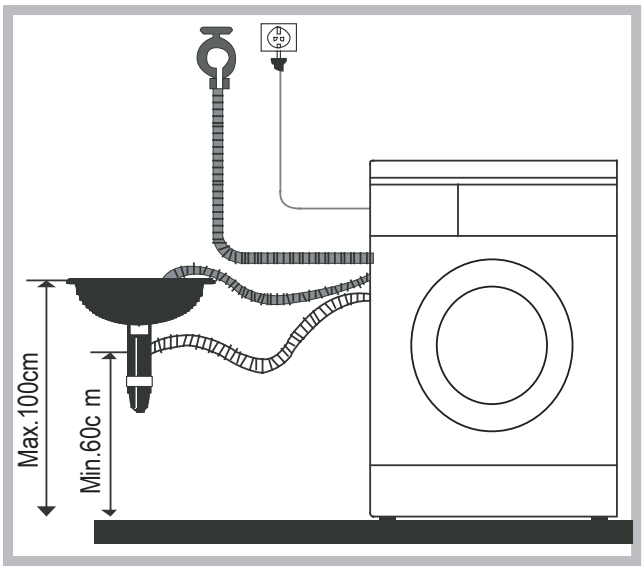

2. Connect it to the branch drain pipe.

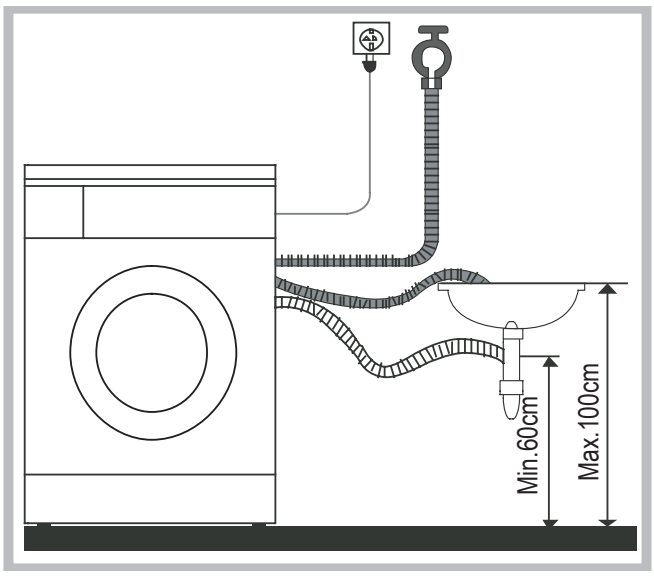

When installing the drain hose into the laundry sink, make sure it is properly fitted with rope to hold it in place. If the hose is too long, do not try to push the end were it comes from the appliance in to shorten length, this can damage it.

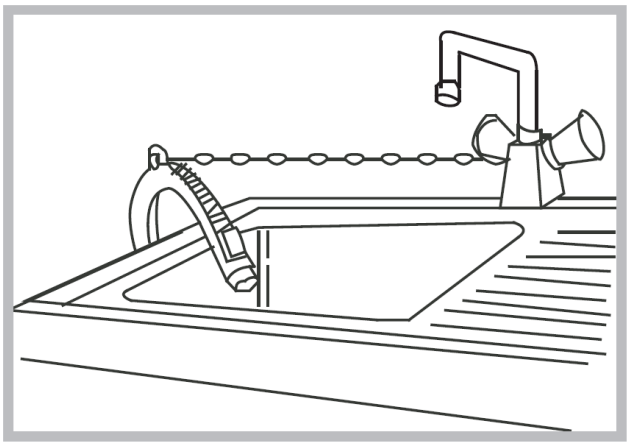

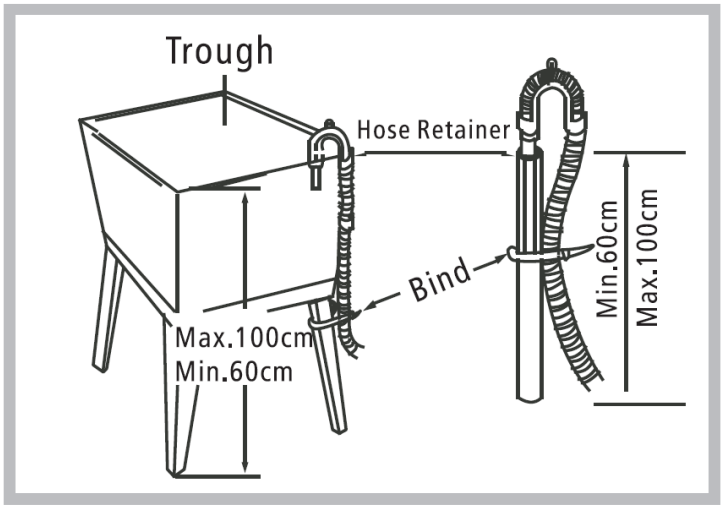

WARNING

- Make sure that the hose is not higher then 120cm above the ground, otherwise appliance will not drain the water well.
- Never lay down the drain hose otherwise water will pour out.
- Make sure the hose has no kinks so it can drain properly.

GETTING STARTED (Cont.)

Electrical connection

- As the maximum current through the unit is 10A when you are using its heating function, please make sure the power supply system (current, power voltage and wire) at your home can meet the normal loading requirements of the electrical appliances.
- Please connect the power to a socket which is correctly installed and properly earthed.
- Make sure the power voltage at your place is same to that in the machine's rating label.
- Power plug must match the socket and cabinet must be properly and effectively earthed.
- Do not use multi-purpose plug or socket as extension cord.
- Do not connect and pull out plug with wet hand.
- When connecting and pulling out the plug, hold the plug tightly and then pull it out. Do not pull power cord forcibly.

If power cord is damaged or has any sign of being broken, special power cord must be selected or purchased from its manufacturer or service center for replacement.

WARNING

- This machine must be earthed properly. If there is any short circuit, earthing can reduce the danger of electrical shock. This machine is equipped with power cord, which includes plug, earthing wire at earthing terminal.
- Washing machine shall be operated in a circuit separate from other electrical appliances. Otherwise, power protector may be tripped or fuse may be burned out.

INSTRUCTIONS

BEFORE FIRST USE

- Before any first wash make sure everything is installed correctly. Make sure to do one wash with no items inside to clean out the tube before your first loaded wash.

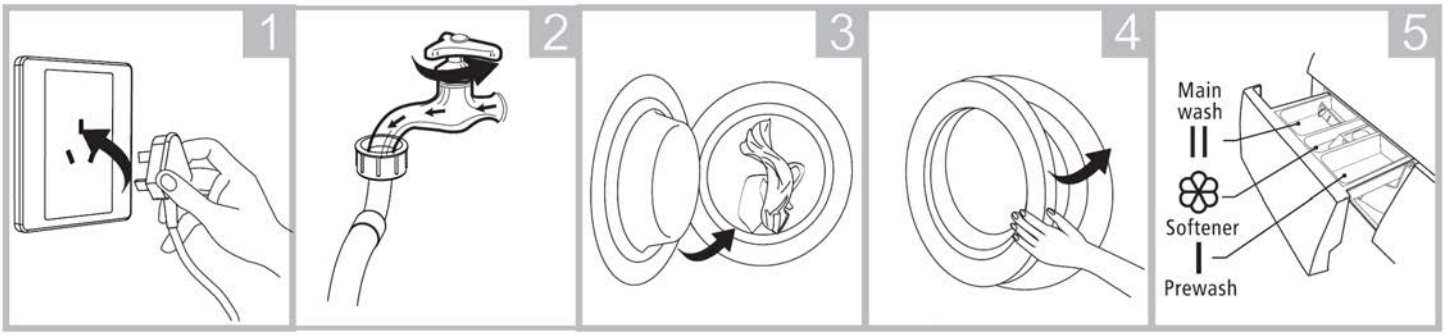

Plug in | Open tap | Load | Close door | Add detergent

After the above steps have been completed, In a few simple steps shown below you can select the type of wash you want and get started.

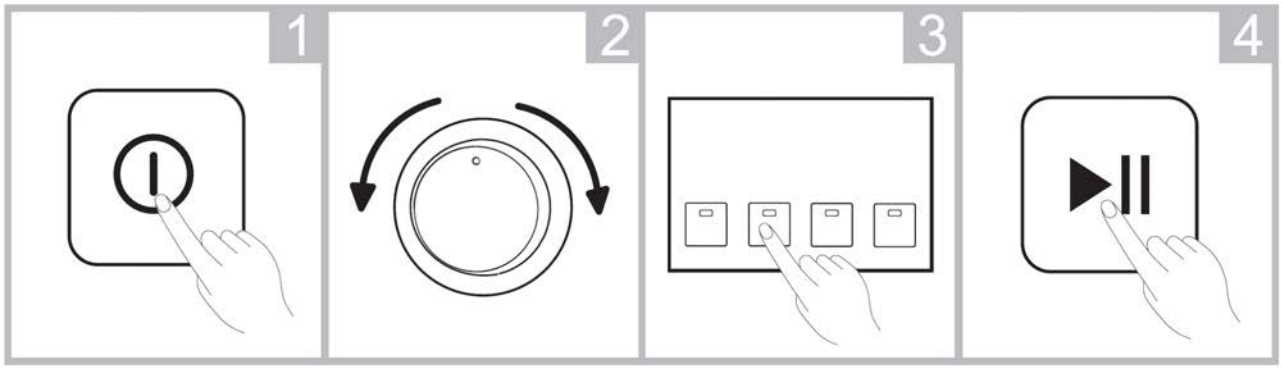

Power On | Select Programme | Select function or default | Start up

INSTRUCTIONS (Cont.)

- Make sure that the appliance is in a correct working temperature (0-40˚C). If the appliance is used under 0˚C the inlet valve and draining system may be damaged.
- Make sure that all labels are checked on items if they can be washed.
- Use non-foaming or less-foaming detergents which are more suitable for washing machines to wash correctly.

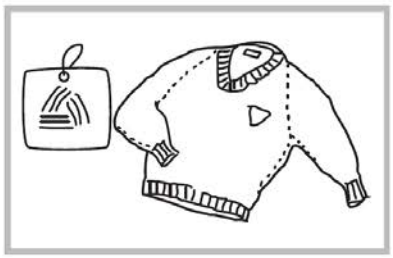

Check the label

Take out the items out of the pockets

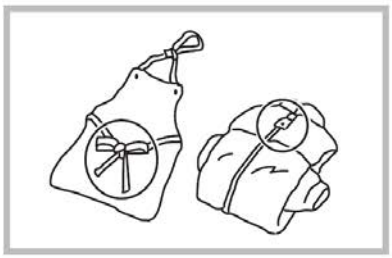

Knot the long strips,zip or button

Put small clothes into the pillow slip

Turn easy-pilling and long-pile fabric inside out

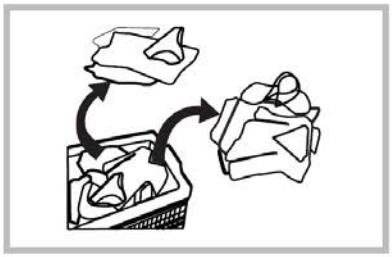

Separate clothes with different textures

WARNING

- Never use the washing machine to wash a single item at any given time, if you need to urgently wash an item, we suggest placing a few clothing items in there.
- Make sure that all labels are checked on items if they can be washed.
- Use non-foaming or less-foaming detergents which are more suitable for washing machines to wash correctly.

INSTRUCTIONS (Cont.)

WASH CARE SYMBOLS

When choosing a wash program, check for any labels on your clothes and follow the instructions. below are some commonly used symbols.

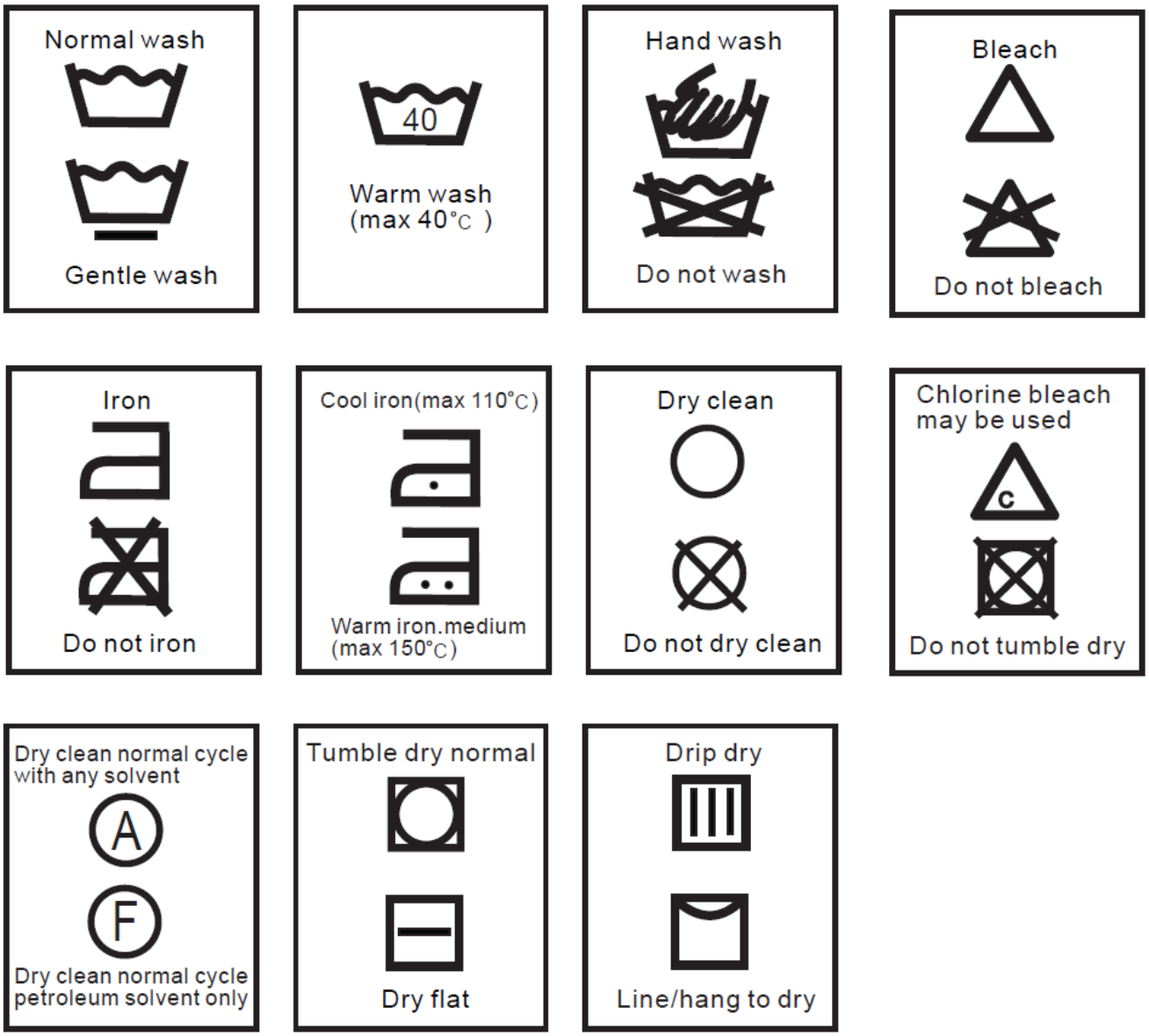

DETERGENT DISPENSER

Only use low-subsiding detergents and clothing care preparations that are for use in a front load washing machine.

INSTRUCTIONS (Cont.)

WASHING PROGRAMS TABLE

Procedure / Description	Load(kg)		Detergent Box			Default Temp.(℃)	Default Time (Min)		Default Speed (rpm)	
	6.0	7.5	Case I	Case II	Softener Case	6.0/7.5	6.0	7.5	1200	1400
							1200	1400		
Cotton Intensive	6.0	7.5	×	●	○	40	1:58	1:58	1000	1000
Cotton 60°	6.0	7.5	×	●	○	60	4:36	4:41	1200	1400
Cotton 40°	6.0	7.5	×	●	○	40	1:25	1:25	1200	1400
Cotton 20°	6.0	7.5	×	●	○	20	1:13	1:13	1000	1000
Quick 15'	2.0	2.0	×	●	○	Cold	0:15	0:15	800	800
Eco Wash	2.0	2.0	×	●	○	30	1:06	1:06	800	800
Rinse&Spin	6.0	7.5	×	×	○	–	0:31	0:31	1000	1000
Baby Care	6.0	7.5	×	●	○	60	1:39	1:39	1000	1000
Sports	3.0	3.5	×	●	○	40	1:19	1:19	800	800
Synthetic	3.0	3.5	×	●	○	40	1:33	1:33	1200	1200
Mixed	6.0	7.5	×	●	○	40	1:13	1:13	1000	1000
Delicate	2.5	2.5	×	●	○	30	1:00	1:00	600	600
Wool	2.0	2.0	×	●	○	40	1:06	1:06	400	400
Drain Only	–	–	×	×	×	–	0:01	0:01	0	0
Spin Only	6.0	7.5	×	×	×	–	0:12	0:12	1000	1000

● Must ○ Optional ×Not Necessary

- *Cotton 60°C, spin speed 1400 is the standard washing programs to which the information in the energy efficiency label relates, and they are suitable to clean normal soiled cotton laundry and they are the most efficient programs in terms of energy and water consumption for washing that type of cotton laundry, the actual water temperature may differ from the declared cycle temperature.

OPERATIONS

PROGRAMS

Select the desired programs according to the clothes that are being washed.

PROGRAMS	
Cotton Intensive	Hard-wearing textiles, heat-resistant textiles made of cotton or linen for extended time.
Cotton	Hard-wearing textiles, heat-resistant textiles made of cotton or linen.
Quick 15’	It is suitable for washing few clothes which are not very dirty quickly.
Eco Wash	Saves energy and the maximum temperature for this program is 40°C. Use to wash few clothes that are not very dirty.
Baby Care	Baby care program with extra rinse.
Sports	To wash active wear
Synthetic	Wash synthetic articles such as shirts, coats, etc... While washing knitting textiles, detergent quantity should be reduced as it can easily form bubbles.
Mixed	Use on tough clothes that need extended time.
Delicate	For delicate washable textiles (made of silk, satin, synthetic fibres or blended fabrics).
Wool	Select the desired temperature to wash wool fabric.
Delay 24h	The function can be set with any program which will delay when the washing commences.
Drum Clean	This Program is to be only used to clean out the drum. NO ITEMS are to be inside when this is to be used, its only to be used for cleaning the drum at a high temperature for pure sterilization of the drum.
Spin Only	Extra spin with selectable spin speeds.
Rinse & Spin	Extra rinse with spin.
Drain Only	Drain out the water.

OPERATIONS (Cont.)

MY CYCLE

Save your most frequently used washing cycle as a favourite.

To do this:

1. Press and hold Speed/Temp for 3 seconds while your desired cycle is in progress.
2. When starting a load of washing, Turn the dial to “My Wash” then “Start/Pause” to begin.

CHILD SAFETY LOCK: Press and hold “Delay” & “Speed” until light activates child safety lock. Press and hold both buttons again to de-activate.

CLEANING AND MAINTENANCE

WARNING:

- Before starting maintenance, ensure that the appliance is unplugged and close the tap.

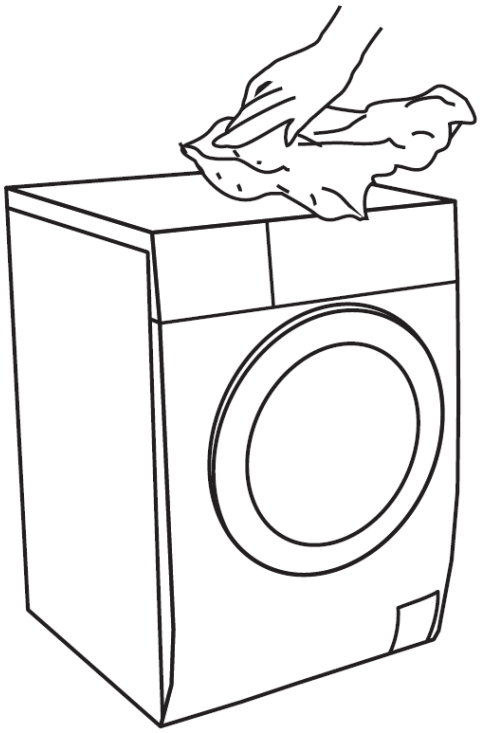

CLEANING THE CABINET

Proper maintenance on the washing machine can extend its working life.

The surface can be cleaned with diluted non-abrasive neutral detergents when necessary.

If there is any water overflow, use a wet cloth to wipe it off immediately. Make sure no sharp items are used to clean the appliance.

CLEANING THE DOOR SEAL AND GLASS

Wipe the glass and seal after each wash to remove lint and stains. If lint builds up it can eventually cause leaks. Remove any coins, buttons or other objects from the seal (if any) after each wash.

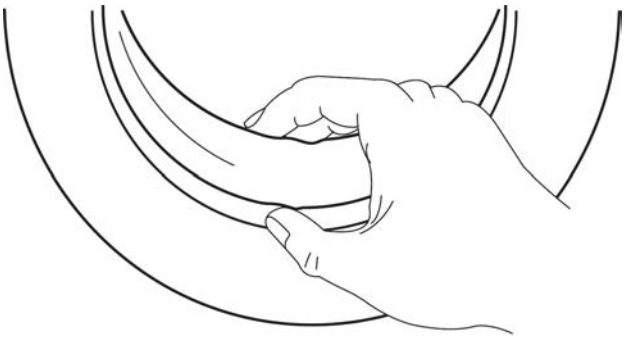

CLEANING AND MAINTENANCE (Cont.)

CLEANING THE INLET FILTER

Washing the filter in the tap

1. Close the tap
2. Remove the water supply hose from the tap
3. Clean the filter
4. Reconnect the water supply hose

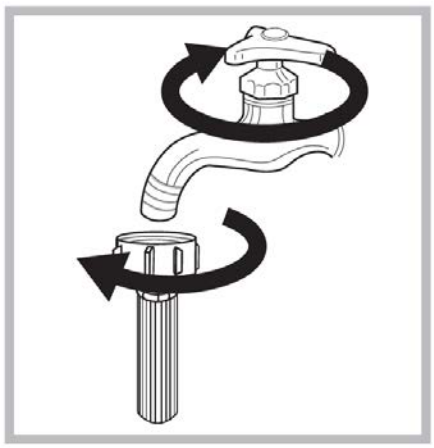

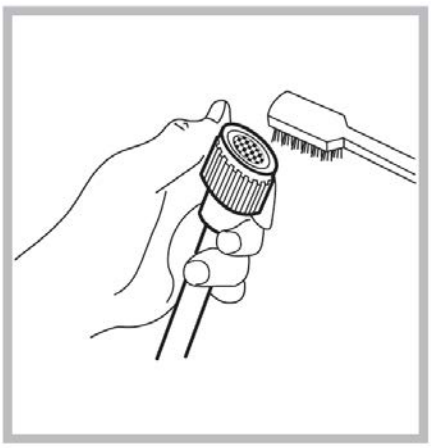

Washing the filter in the washing machine

1. Screw off the inlet pipe from the back of appliance
2. Pull out the filter with long nose pliers and reinstall after being washed
3. Use the brush to clean the filter
4. Reconnect the inlet pipe and turn on the tap

CLEANING AND MAINTENANCE (Cont.)

CLEANING THE DETERGENT DISPENSER

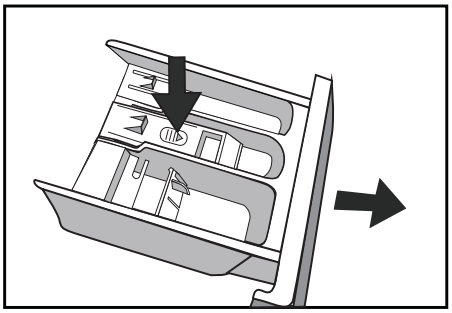

1. Press down the arrow location on the softener cover inside the washing machine dispenser.
2. Lift the clip up and take out the softener cover and wash all the grooves with water.
3. Restore the softener cover and push the drawer into position.

CLEANING THE INLET FILTER

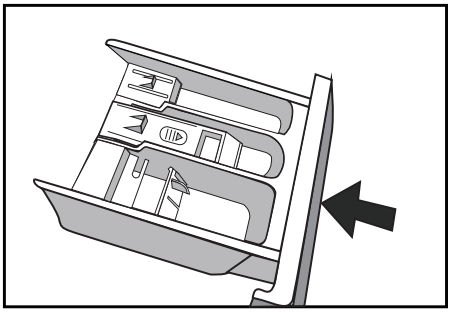

Inlet filter shall must be cleaned if there is not any or insufficient water in when the tap is opened.
Clean the tap filter:

1. Close the tap.
2. Select any procedure except “Wash” or “Drain” procedure.
3. Press the button “Start/Pause” and keep the procedure running for about 40 seconds.
4. Remove the inlet pipe from the tap.
5. Use water to wash the filter.
6. Reconnect the inlet pipe. Washing the filter in washing machine:

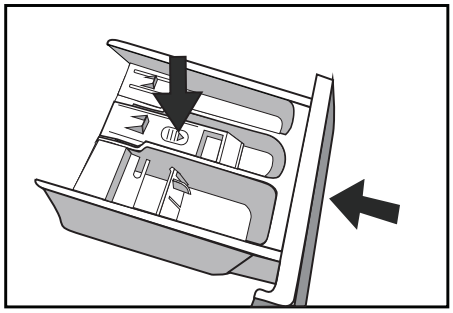

- Screw off the inlet pipe from the backside of the machine.
- Pull out the filter with long nose pliers and re install it back after being washed.
- Reconnect the inlet pipe.
- Open the tap and make sure there is no water leakage.
- Close the tap.

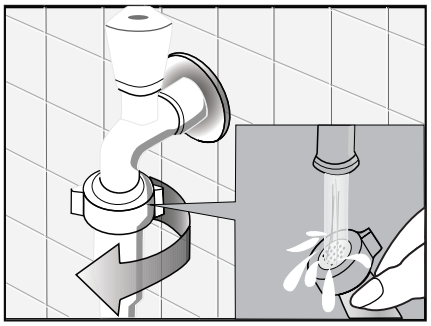

NOTES: Generally, the tap filter is washed first and then the filter in washing machine will be washed. If only the filter in washing machine is washed, then the steps 1~3 in cleaning the tap filter shall be repeated.

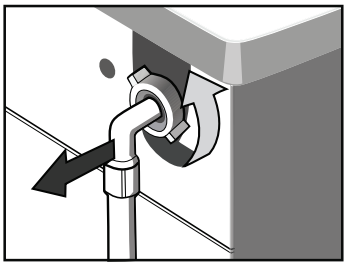

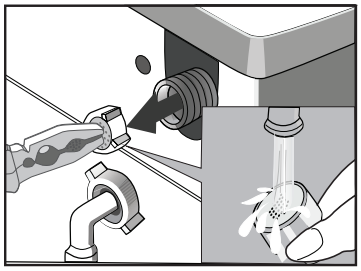

NOTE

Do not use alcohol, solvents or chemical products to clean the machine.

CLEANING AND MAINTENANCE (Cont.)

CLEANING THE DRAIN PUMP FILTER

1 Be careful of the hot water.
2 Allow the detergent solution to cool down.
3 Drain pump filter can filter the yarns and small foreign matters from the washing.
4 Clean the filter periodically to ensure the washing machine operates normally.

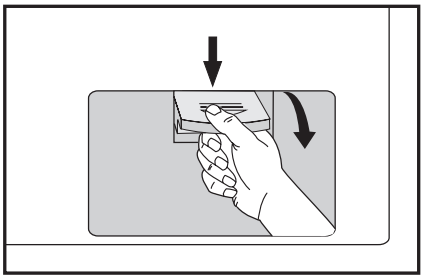

1.After the power is disconnected, open the filter cover.

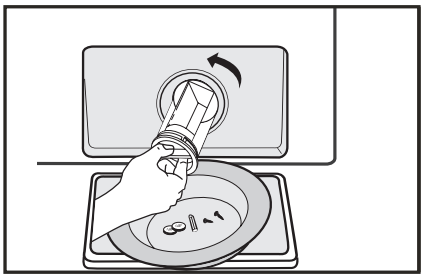

2.Turn the filter down as shown with the figure and take out sundries matters.

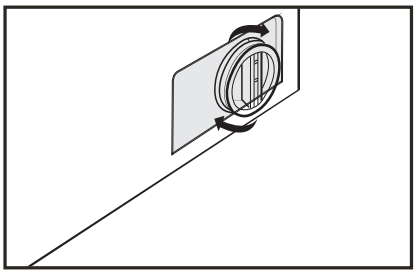

3.Reinstall each part back after sundries matters are removed.

CAUTION

- Make sure that the valve cap and drain hose are reinstalled properly.
  Cap plates should be inserted aligning to hole plates otherwise water may leak.
- When the appliance is in use and depending on the program selected there can be hot water in the pump. Never remove the pump cover during a wash cycle, always wait until the appliance has finished the cycle and is empty.
  When replacing the cover ensure it is tightly secured.

FAQs

Problem	Possible Cause	Solution
Washing machine is not starting	Door is not closed properly	Restart after the door is closed, check if the clothes are stuck
Door can't be opened	Washer's safety protection is active	Disconnect the power and restart the appliance
Water Leakage	The connection between inlet pipe or outlet hose is not tight	check and fasten water pipes. Clean up outlet hose.
Detergent residues are in the dispenser	detergent might be dampened	Clean and wipe the detergent dispenser
Indicator or display isn't working	Disconnect the power, PC board or harness may have a connection problem.	Check if the power is on and the power plug is connected correctly.
Abnormal Noise		Check if the Transport bolts at the back of the appliance have been removed. Check it's installed on a level and solid floor.

Display LED	**Description**	**Possible Cause**	**Solution**
E30	Door lock problem	Door is not closed properly.	Restart after the door is closed.
E10	Water injecting problem while washing	• Tap is not opened or water flows too slowly. • Inlet valve filter is blocked. • Inlet pipe is twisted. • If water is not supplied	• Open the tap or wait until the water supply becomes normal. • Check inlet valve filter • Straighten the water pipe • Check the other taps in the room.
E21	Drain problem while washing	• Outlet hose is blocked or twisted • Drain pump is blocked	• Wash and straighten outlet hose. • Wash drain pump filter

SPECIFICATIONS

Power Supply	220-240V~50Hz
Standard Water Pressure	0.05MPa~1MPa
Washing Capacity	7.5KG
Rated Power	2000W
Rated Current	10A
Max Spin Speed	1400 RPM
Dimensions	595 (w) x 565 (d) x 850 (h) mm
Weight:	Net: 68kg / Gross: 72kg

SEIKI

CUSTOMER HELPLINE:
1300 296 699

DISTRIBUTED BY:
Ayonz Pty Ltd

VERSION:
1.2