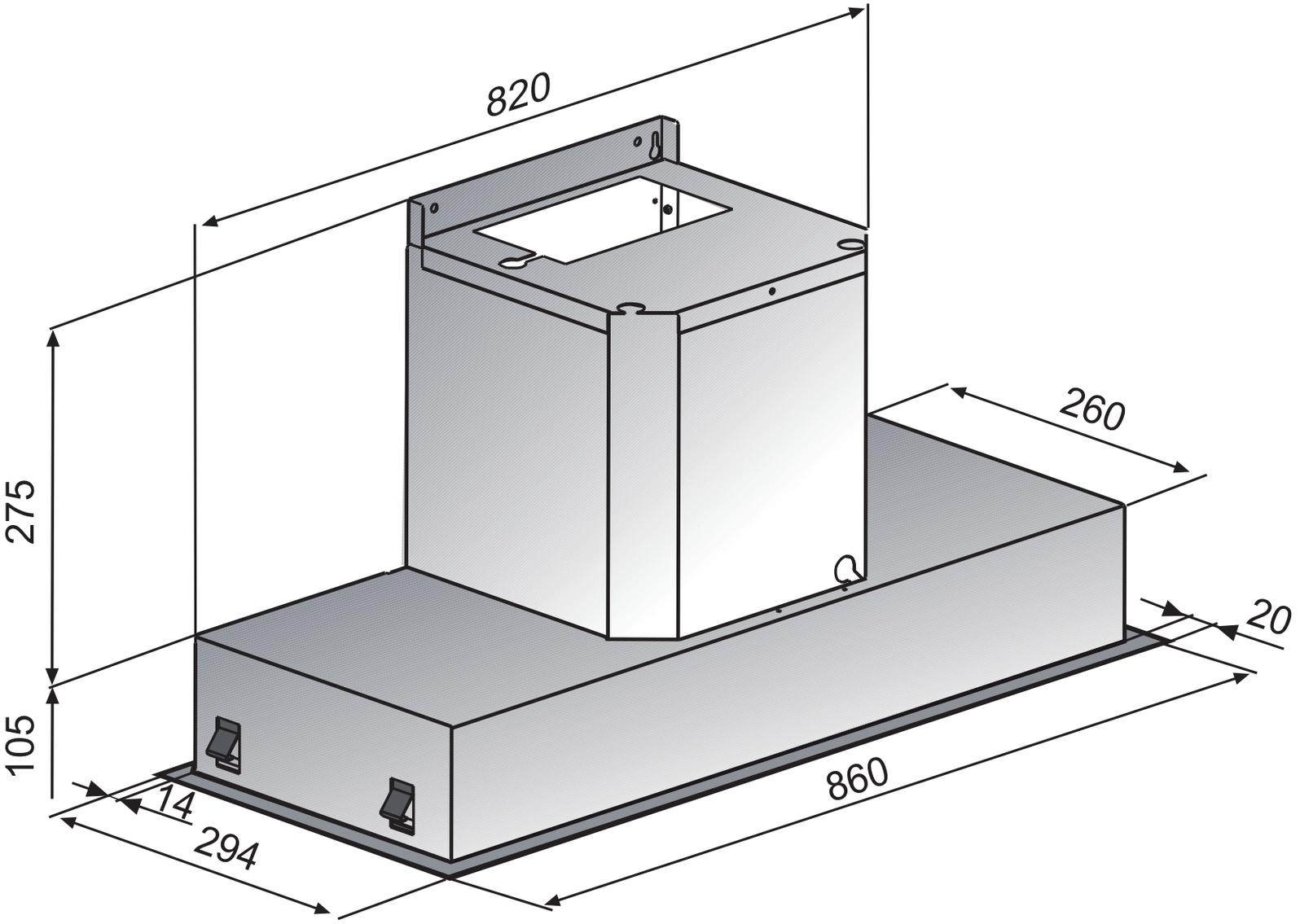# CC4840