TURNER HASTINGS

16 McPherson Rd, Smeaton Grange NSW 2567
1300 00 2284
ABN 94 630 362 864
www.turnerhastings.com.au
info@turnerhastings.com.au

SLIMLINE ADJUSTABLE BOTTLE S TRAP REF #AU4040BTS

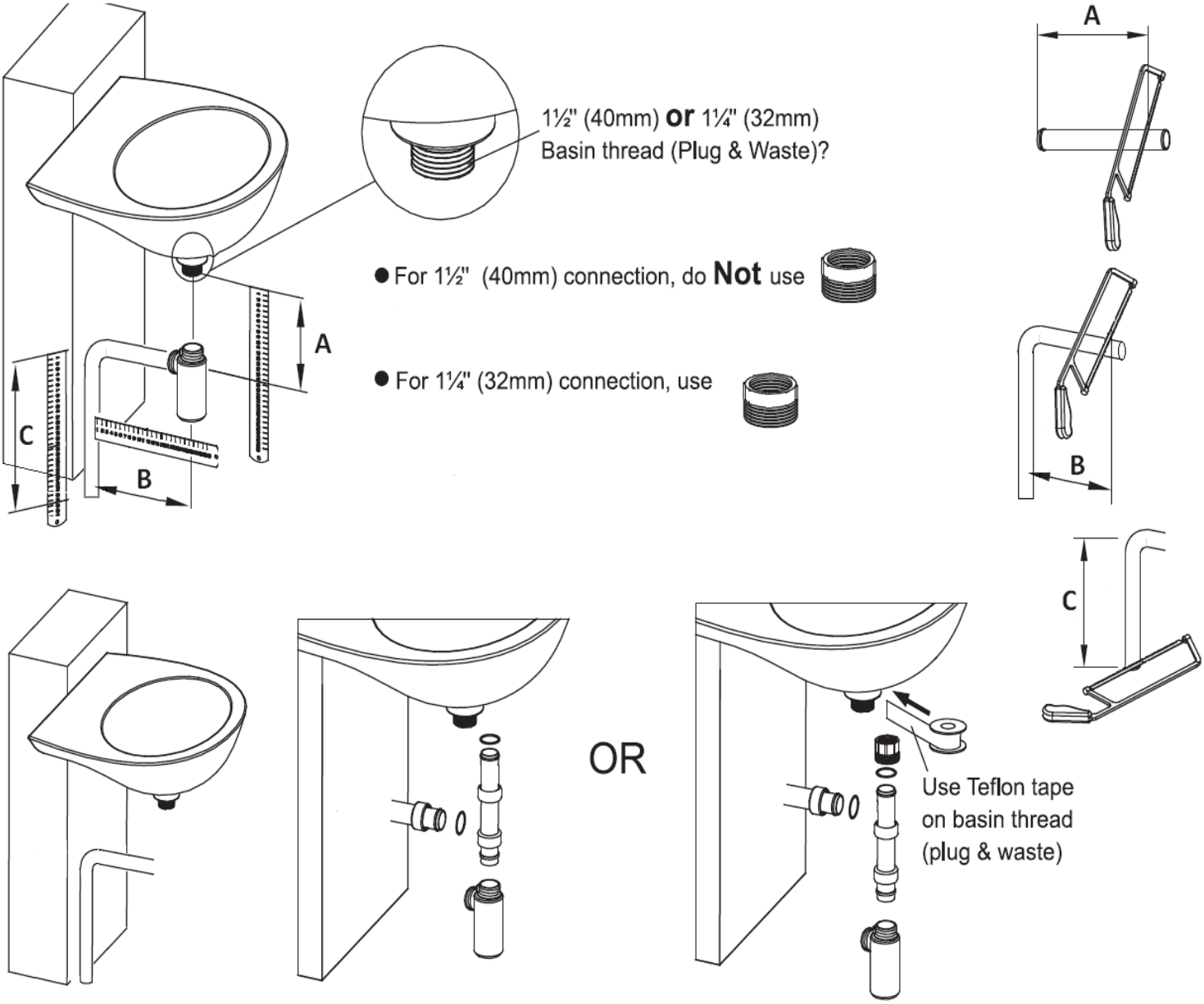

TURNER HASTINGS
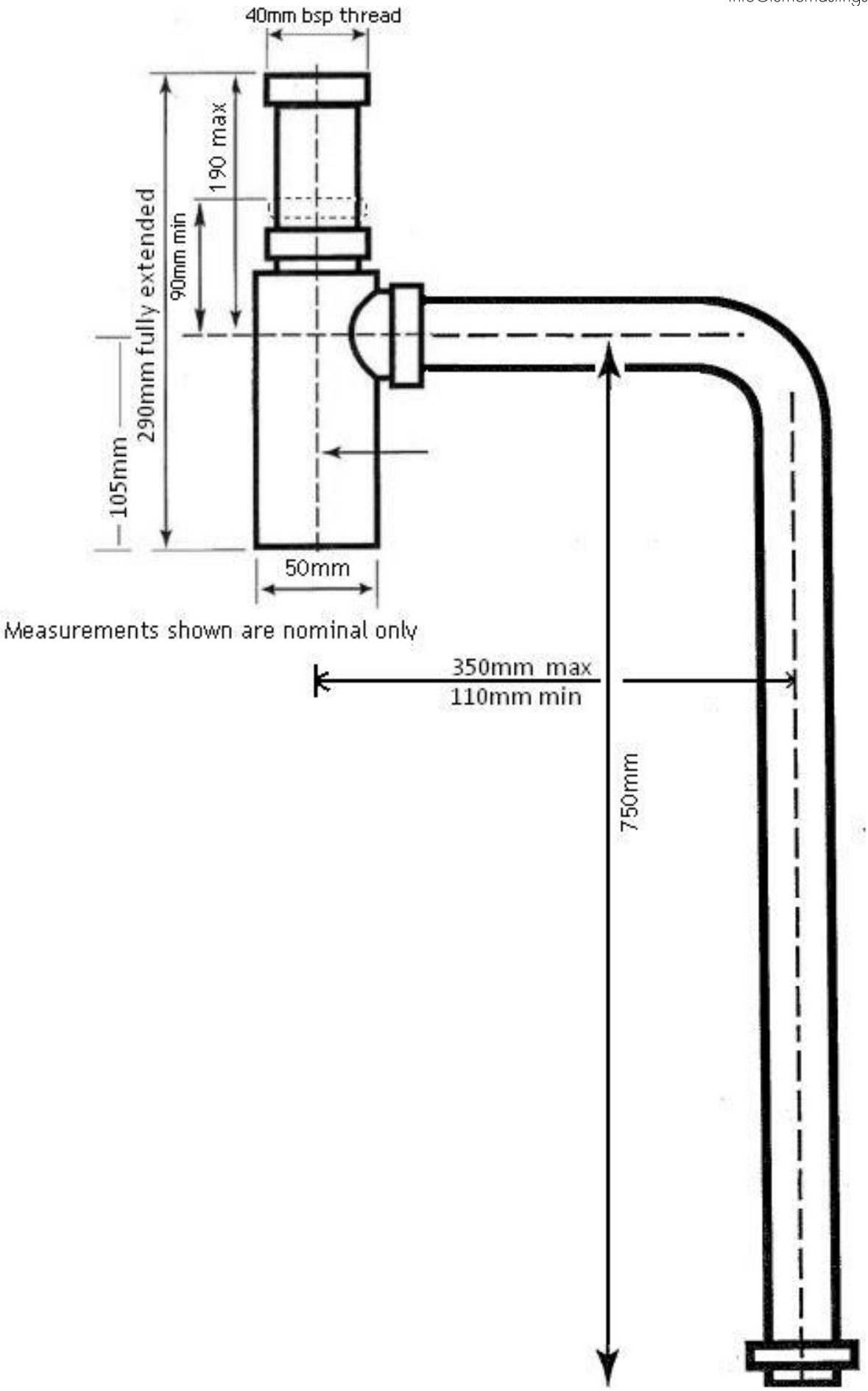
16 McPherson Rd, Smeaton Grange NSW 2567
1300 00 2284
ABN 94 630 362 864
www.turnerhastings.com.au
info@turnerhastings.com.au