Layer SBR 104

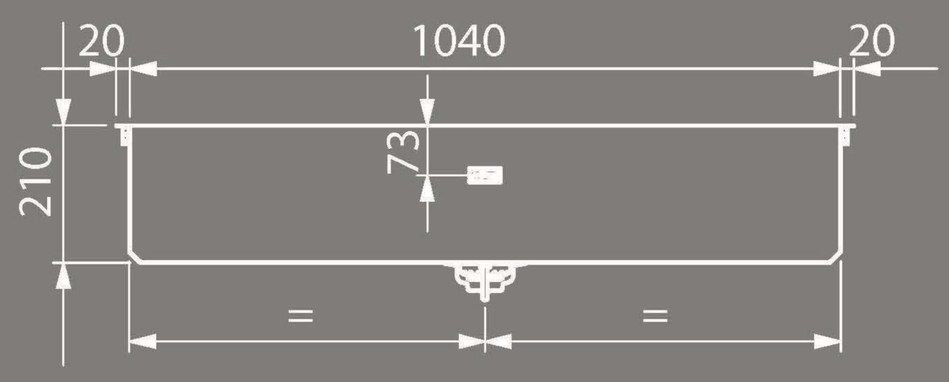

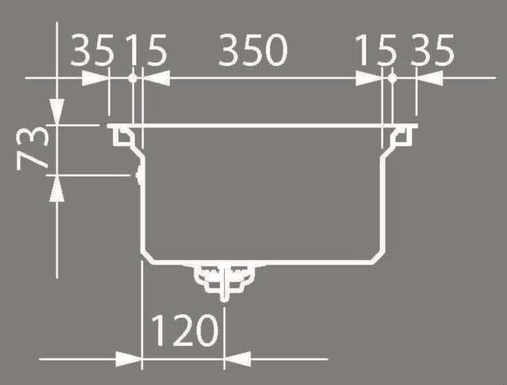

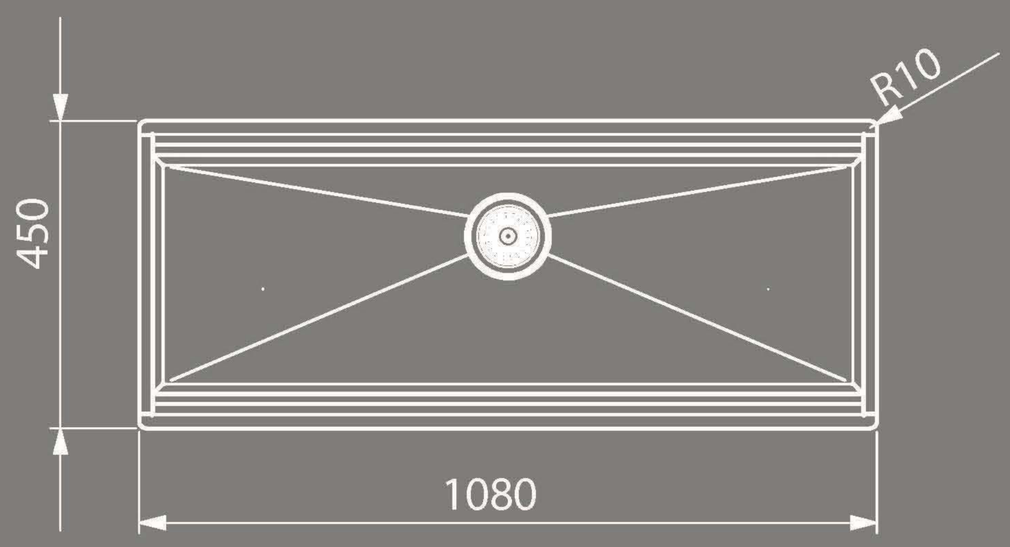

Sopratop
Overmount

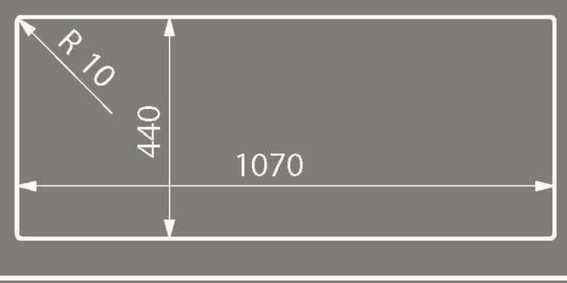

Sottotop
Undermount

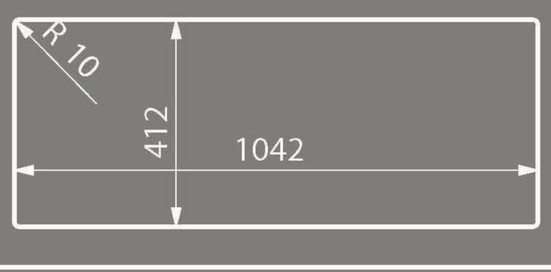

Dettagli	Details	
Dimensioni esterne mm	Outer dimension mm	**1080x450 h 210**
Dimensioni vasca mm	Bowl dimension mm	**1040x350**
Dimensioni vasca mm	Bowl dimension mm	
Base cm	Cabinet cm	**120**
Piletta	Outlet	**3,5”**
Dimensioni scatola mm	Box sizes mm	**1195x520x295 18 kg**

Incasso	Installation	Codice Code	
Sopratop	Overmount	**SBR104**	
Sottotop	Undermount	**SBRST104**	

Accessori *Accessories*

SS01164

SS01165

VFPSBR19

VPSBR19

VFGSBR34

VFGSBR30

VGSBR34

VFGSBRE