Whirlpool

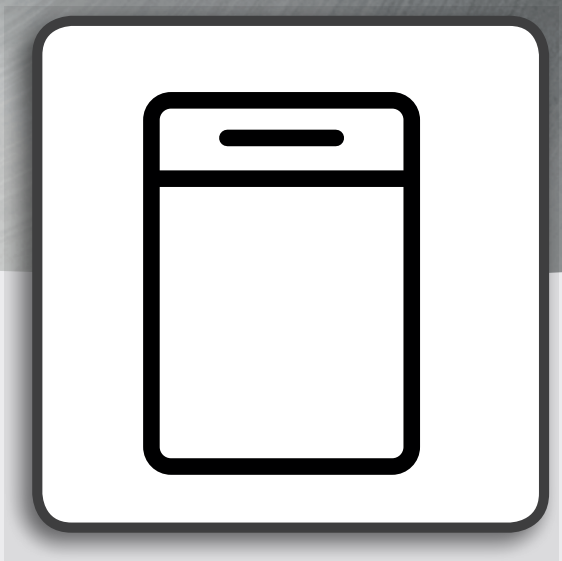

WDFS3L5PBSSG

WDFS3L5PIXSG

INSTALLATION GUIDE, SAFETY INSTRUCTIONS AND DAILY REFERENCE GUIDE

Table of Contents

Installation guide 3
Safety instructions 3
Daily reference guide 5
- Control Panel 7
- First Time Use 7
- Daily Use 8
- Advice And Tips 8
- Programs Table 9
- Options And Functions 9
- Loading The Racks 10
- Care And Maintenance 10
- Troubleshooting 11

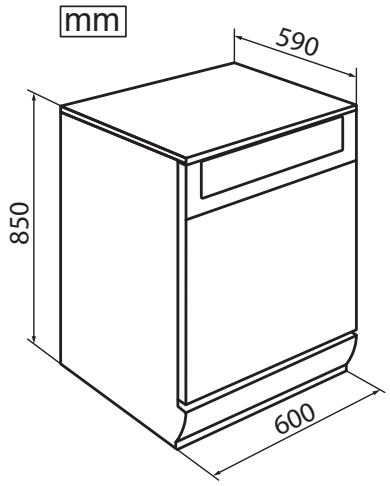
mm
590
850
600

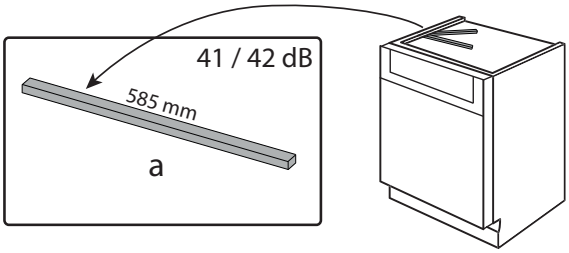
41 / 42 dB
585 mm
a

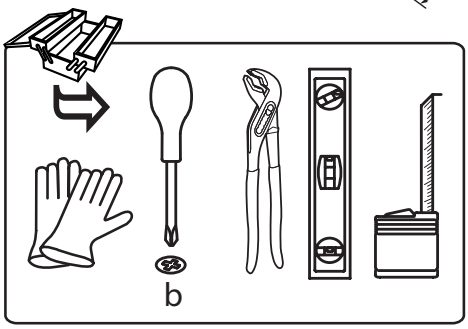
b

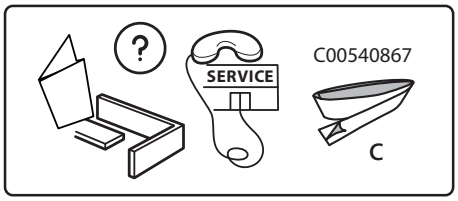
SERVICE
C00540867
c

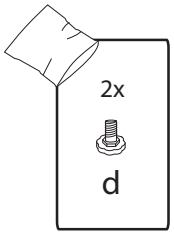
2x
d

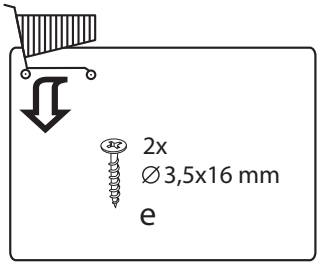
2x
∅3,5x16 mm
e

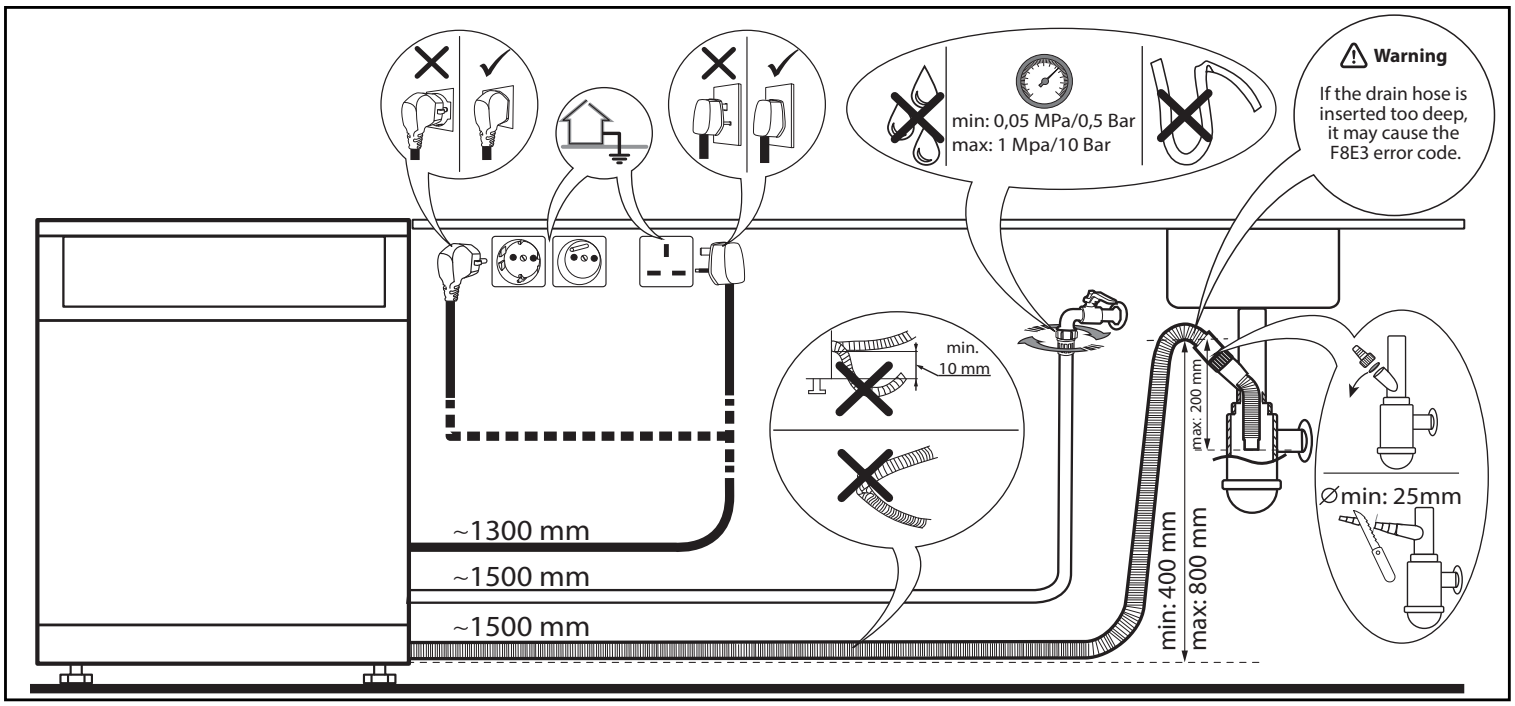
min: 0,05 MPa/0,5 Bar
max: 1 Mpa/10 Bar
Warning
If the drain hose is inserted too deep, it may cause the F8E3 error code.
min. 10 mm
max: 200 mm
∅min: 25mm
~1300 mm
~1500 mm
~1500 mm
min: 400 mm
max: 800 mm

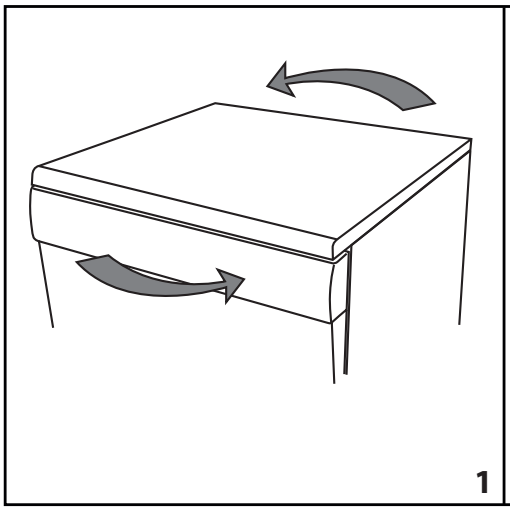
1

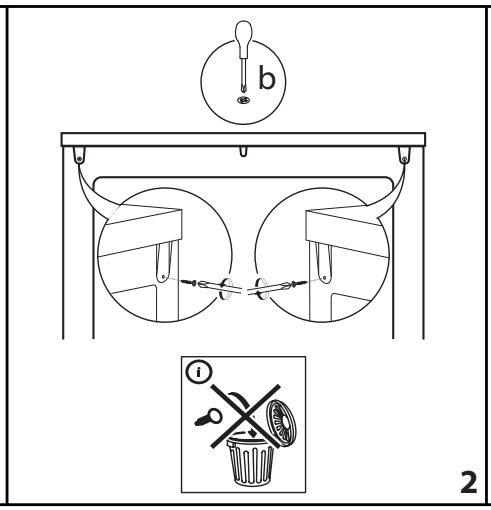
b
2

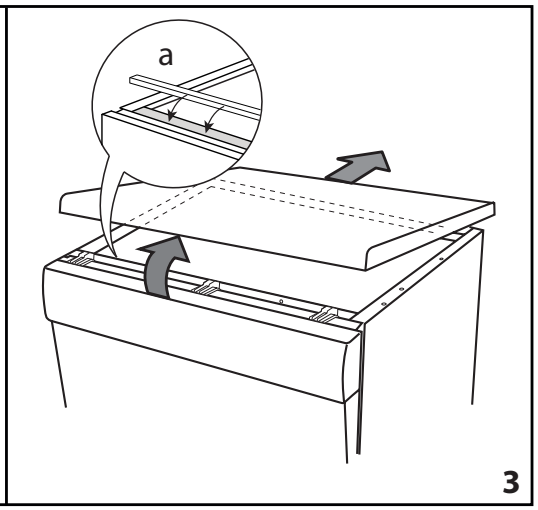
a
3

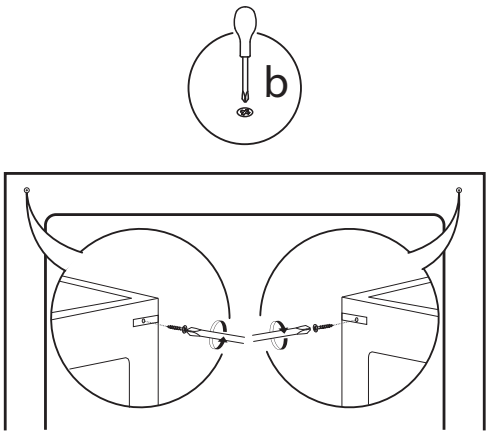

4

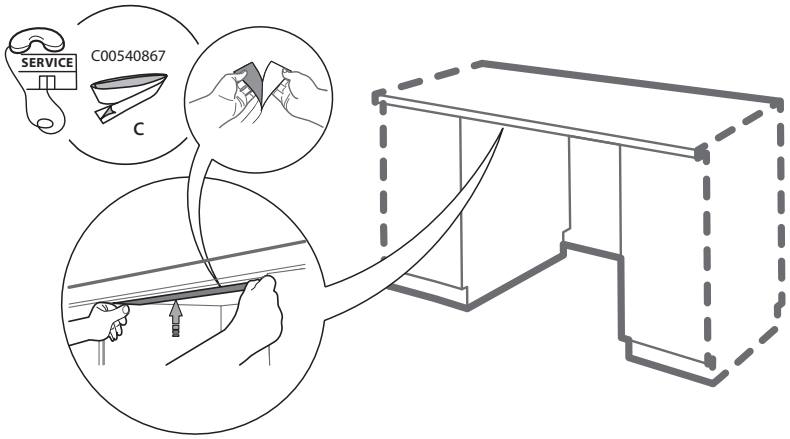

5

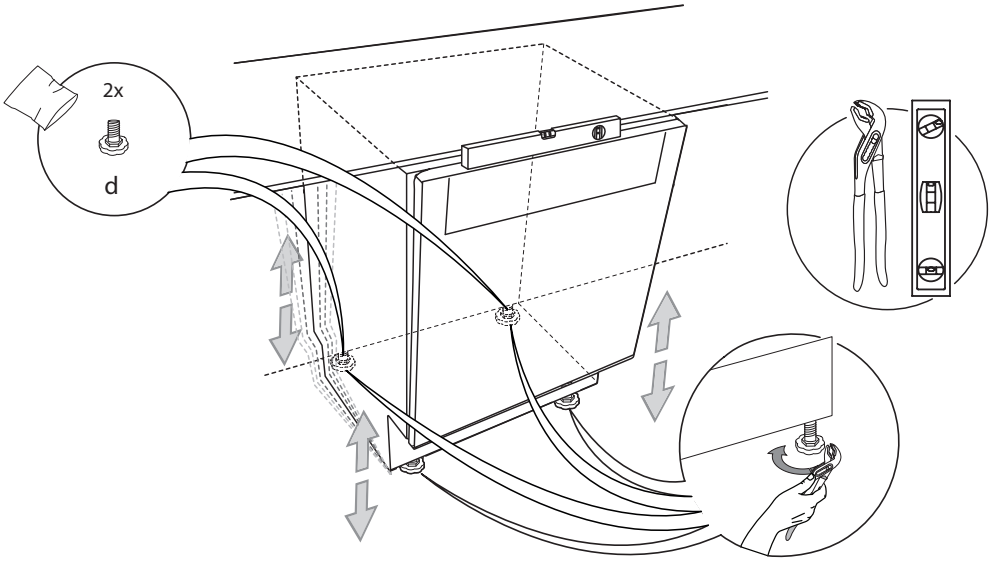

6

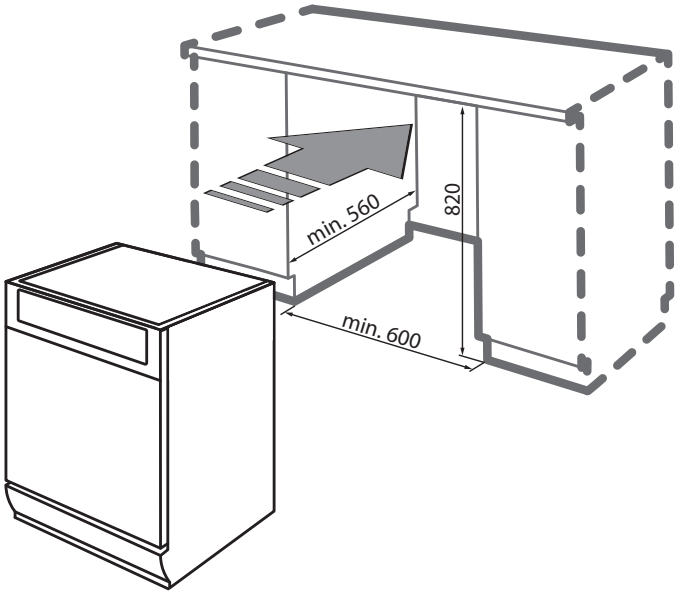

7

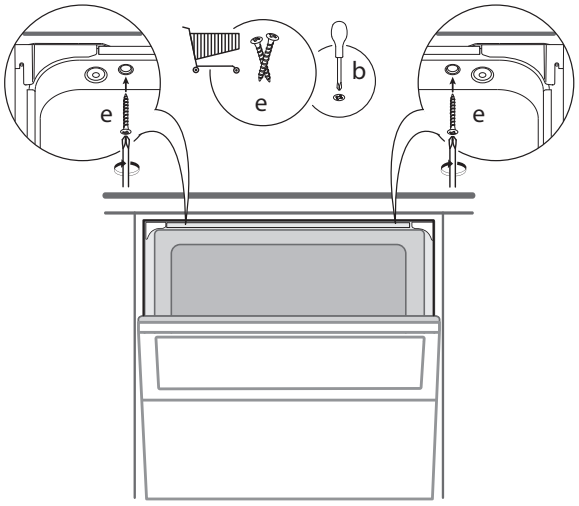

8

IMPORTANT TO BE READ AND OBSERVED

Before using the appliance, read these safety instructions. Keep them nearby for future reference. These instructions and the appliance itself provide important safety warnings, to be observed at all times. The manufacturer declines any liability for failure to observe these safety instructions, for inappropriate use of the appliance or incorrect setting of controls. ⚠ Very young children (0-3 years) should be kept away from the appliance. Young children (3-8 years) should be kept away from the appliance unless continuously supervised. Children from 8 years old and above and persons with reduced physical, sensory or mental capabilities or lack of experience and knowledge can use this appliance only if they are supervised or have been given instructions on safe use and understand the hazards involved. Children must not play with the appliance. Cleaning and user maintenance must not be carried out by children without supervision.

PERMITTED USE

⚠ CAUTION: the appliance is not intended to be operated by means of an external switching device, such as a timer, or separate remote controlled system.

⚠ This appliance is intended to be used in household and similar applications such as: staff kitchen areas in shops, offices and other working environments; farm houses; by clients in hotels, motels, bed & breakfast and other residential environments.

⚠ The maximum number of place settings is shown in the product sheet.

⚠ The door should not be left in the open position - risk of tripping. The open appliance door can only support the weight of the loaded rack when pulled out. Do not rest objects on the door or sit or stand on it.

⚠ **WARNING:** Dishwasher detergents are strongly alkaline. They can be extremely dangerous if swallowed. Avoid contact with the skin and eyes and keep children away from the dishwasher when the door is open. Check that the detergent receptacle is empty after completion of the wash cycle.

⚠ **WARNING:** Knives and other utensils with sharp points must be loaded in the basket with their points down or placed in a horizontal position - risk of cuts.

⚠ This appliance is not for professional use. Do not use the appliance outdoors. Do not store explosive or flammable substances (e.g. gasoline or aerosol cans) inside or near the appliance - risk of fire. The appliance must be used only to wash domestic dishes in accordance with the instructions in this manual. The water in the appliance is not potable. Use only detergent and rinse additives designed for an automatic dishwasher. When adding salt to the water softener, run one cycle immediately to avoid corrosion damage to internal parts. Store the detergent, rinse aid and salt out of reach of children. Shut off the water supply and unplug or disconnect the power before servicing and maintenance. Disconnect the appliance in the event of any malfunction.

INSTALLATION

⚠ The appliance must be handled and installed by two or more persons - risk of injury. Use protective gloves to unpack and install - risk of cuts. Connect the dishwasher to the water mains using only new hose sets. The old hose sets should not be reused. All hoses must be securely clamped to prevent them coming loose during operation. All local waterboard regulations must be complied with. Water supply pressure 0.05 - 1.0 MPa. The appliance must be placed against the wall or built into furniture to limit the access to its rearside. For dishwashers having ventilation openings in the base, the openings must not be obstructed by a carpet.

⚠ Installation, including water supply (if any) and electrical connections, and repairs must be carried out by a qualified technician. Do not repair or replace any part of the appliance unless specifically stated in the user manual. Keep children away from the installation site. After unpacking the appliance, make sure that it has not been damaged during transport. In the event of problems, contact the dealer or your nearest After-sales Service. Once installed, packaging waste (plastic, styrofoam parts etc.) must be stored out of reach of children - risk of suffocation. The appliance must be disconnected from the power supply before any installation operation - risk of electrical shock. During installation, make sure the appliance does not damage the power cable - risk of fire or electrical shock. Only activate the appliance when the installation has been completed.

If installing the dishwasher at the end of a row of units making the side panel accessible, the hinge area must be covered to avoid risk of injury. The inlet water temperature depends on the dishwasher model. If the installed inlet hose is marked „25°C Max", the maximum allowed water temperature is 25°C. For all other models the maximum allowed water temperature is 60°C. Do not cut hoses and, in the case of appliances fitted with a waterstop system, do not immerse the plastic casing containing the inlet hose in water. If hoses are not long enough, contact your local dealer. Make sure the inlet and drain hoses are kink-free and are not crushed. Before using

the appliance for the first time, check the water inlet and drain hose for leaks. Make sure that the four feet are stable and resting on the floor, adjusting them as required, and check that the dishwasher is perfectly levelled using a spirit level.

ELECTRICAL WARNINGS

The rating plate is on the edge of the dishwasher door (visible when the door is open).

⚠ It must be possible to disconnect the appliance from the power supply by unplugging it if plug is accessible, or by a multi-pole switch installed upstream of the socket and the appliance must be earthed, in conformity with national electrical safety standards.

⚠ Do not use extension leads, multiple sockets or adapters. The electrical components must not be accessible to the user after installation. Do not use the appliance when you are wet or barefoot. Do not operate this appliance if it has a damaged power cable or plug, if it is not working properly, or if it has been damaged or dropped.

⚠ If the supply cord is damaged, it must be replaced with an identical one by the manufacturer, its service agent or similarly qualified persons in order to avoid a hazard - risk of electrical shock.

If the fitted plug is not suitable for your socket outlet, contact a qualified technician. Do not pull the power supply cable. Do not immerse the mains cord or plug in water. Keep the cord away from hot surfaces.

CLEANING AND MAINTENANCE

⚠ **WARNING:** Ensure that the appliance is switched off and disconnected from the power supply before performing any maintenance operation. To avoid risk of personal injury use protective gloves (risk of laceration) and safety shoes (risk of contusion); be sure to handle by two persons (reduce load); never use steam cleaning equipment (risk of electric shock).

Non-professional repairs not authorized by the manufacturer could result in a risk to health and safety, for which the manufacturer cannot be held liable. Any defect or damage caused from non-professional repairs or maintenance will not be covered by the guarantee, the terms of which are outlined in the document delivered with the unit.

DISPOSAL OF PACKAGING MATERIALS

The packaging material is 100% recyclable and is marked with the recycle symbol ♻. The various parts of the packaging must therefore be disposed of responsibly and in full compliance with local authority regulations governing waste disposal.

DISPOSAL OF HOUSEHOLD APPLIANCES

This appliance is manufactured with recyclable or reusable materials. Dispose of it in accordance with local waste disposal regulations. For further information on the treatment, recovery and recycling of household electrical appliances, contact your local authority, the collection service for household waste or the store where you purchased the appliance.

This appliance is marked in compliance with European Directive 2012/19/EU, Waste Electrical and Electronic Equipment (WEEE) and with the Waste Electrical and Electronic Equipment regulations 2013 (as amended). By ensuring this product is disposed of correctly, you will help prevent negative consequences for the environment and human health. The symbol on the product or on the accompanying documentation indicates that it should not be treated as domestic waste but must be taken to an appropriate collection center for the recycling of electrical and electronic equipment.

ENERGY SAVING TIPS

ECO program is suitable to clean normally soiled tableware, that for this use, it is the most efficient program in terms of its combined energy and water consumption, and that it is used to assess compliance with the EU Ecodesign legislation.

Loading the household dishwasher up to the capacity indicated by the manufacturer will contribute to energy and water savings. The manual pre-rinsing of tableware items leads to increased water and energy consumption and is not recommended. Washing tableware in a household dishwasher usually consumes less energy and water in the use phase than hand dishwashing when the household dishwasher is used according to the manufacturer's instructions.

THANK YOU FOR BUYING A WHIRLPOOL PRODUCT.
In order to receive a more complete assistance, please register your appliance on: **www.whirlpool.com.hk** or **www.whirlpool.com.sg**

Before using the appliance carefully read Safety and Installation Instructions. More information about your product available on website: www.whirlpool.com.hk and www.whirlpool.com.sg

After installation, please remember to remove all transport protection parts from the dishwasher.

CONTROL PANEL

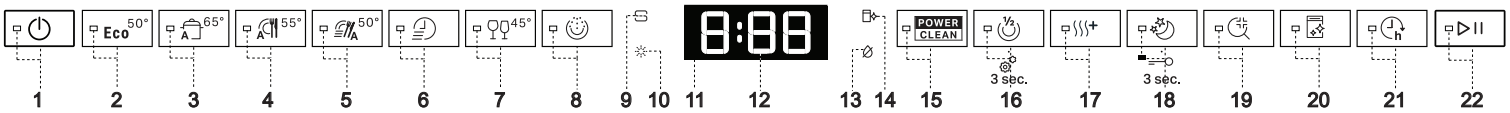

1. **ON-OFF/Reset** button with indicator light
2. **Eco program** button with indicator light
3. **Auto Intensive program** button with indicator light
4. **Auto Mixed program** button with indicator light
5. **Auto Fast program** button with indicator light
6. **Rapid program** button with indicator light
7. **Crystals program** button with indicator light
8. **Prewash program** button with indicator light
9. **Salt** reservoir empty indicator light
10. **Rinse Aid** reservoir empty indicator light
11. **Display**
12. **Program number** and **remaining time** indicator
13. **Closed water tap** indicator light
14. **DESCALE** indicator light
15. **Power Clean® option** button with indicator light
16. **Half Load option** button with indicator light/ **Settings** - 3 sec. press
17. **Extra Dry option** button with indicator light
18. **Silent option** button with indicator light/ **Key lock** - 3 sec. press
19. **Sani Rinse option** button with indicator light
20. **Self-Clean program** button with indicator light
21. **Delay option** button with indicator light
22. **START/Pause** button with indicator light

FIRST TIME USE

SETTING MENU

1. Switch on the appliance by pressing the **ON-OFF** button.
2. Hold the **Settings** (Half Load) button for 3 seconds until you hear a beep.
3. After one second the first available setting (letter"**h**") will be displayed.
4. Press **Eco** button to scroll through the list of available settings (see table below), then press **START/Pause** to view and change the value of the currently selected setting.
5. Press **Eco** to change the value, then press **START/Pause** to save the new value.
6. To change another setting, repeat points 2 and 5.
7. Press **ON-OFF** or wait 30 seconds to exit the menu.

LETTER	SETTING	VALUES (Default - **in bold**)
h	**Water Hardness Level** *(see "SETTING THE WATER HARDNESS" and "WATER HARDNESS TABLE")*	1 | 2 | **3** | 4 | 5
r	**Rinse Aid Level** *(see "ADJUSTING THE DOSAGE OF RINSE AID")*	0 | 1 | 2 | 3 | 4 | **5**
d	**NaturalDry** *(see "OPTIONS AND FUNCTIONS")* "1" = On, "0" = Off	**1** | 0
S	**Sound** "1" = On, "0" = Off	**1** | 0
F	**Factory Settings** Press **START/Pause** to restore to the factory default all the values of the settings included in the settings menu.	-

FILLING THE SALT RESERVOIR

The use of salt prevents the formation of LIMESCALE on the dishes and on the machine's functional components.
The salt reservoir is located in the lower part of the dishwasher (under the lower rack on the left side).

- It is mandatory that **the salt reservoir never be empty** (except water hardness level is set to 0).
- It is important to set the water hardness.
- Salt must be filled when the SALT REFILL indicator light on the control panel is lit.

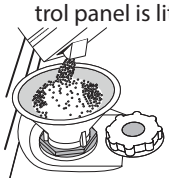

1. Remove the lower rack and unscrew the reservoir cap (anticlockwise).
2. Position the funnel *(see figure)* and fill the salt reservoir right up to its edge (approximately 0,5 kg); it is not unusual for a little water to leak out.
3. **Only the first time you do this: fill the salt reservoir with water.**
4. Remove the funnel and wipe any salt residue away from the opening.

Make sure the cap is screwed on tightly so that no detergent can get into the container during the wash program (this could damage the water softener beyond repair).
Run a program every time as soon as you completed refilling the salt reservoir to avoid corrosion.

Setting the water hardness

To allow the water softener to work in a perfect way, it is essential that the water hardness setting is based on the actual water hardness in your house. This information can be obtained from your local water supplier.
The factory setting is "**3**". See "WATER HARDNESS TABLE".
To change, follow instructions in section "SETTING MENU".

Water Hardness Table			
Level	**°dH** German degrees	**°fH** French degrees	**°Clark** English degrees
0 (soft) *	water softener off		
1 (soft)	0 - 6	0 - 10	0 - 7
2 (medium)	7 - 11	11 - 20	8 - 14
3 (average)	12 - 16	21 - 29	15 - 20
4 (hard)	17 - 34	30 - 60	21 - 42
5 (very hard)	35 - 50	61 - 90	43 - 62

* Level 0 (soft) indicates water hardness same as level 1 in above table, but SALT REFILL indicator ( ) will be automatically switched off.

Only use salt that has been specifically designed for dishwashers.
After the salt has been poured into the reservoir, the SALT REFILL indicator may still flash until the salt concentration reaches the desired level.
The function of the Dishwasher would remain unaffected during this period.
If the salt container is not filled, the water softener and the heating element may be damaged as a result of limescale accumulation.
Use of salt is recommended with any type of dishwasher detergent.

WATER SOFTENING SYSTEM

Water softener automatically reduces water hardness, consequently preventing scale buildup on the heater, contributing also to better cleaning efficiency. **This system regenerates itself with salt, therefore it is required to refill the salt container when empty.** The frequency of regeneration depends on the water hardness level setting - regeneration takes place once per **4-6** Eco cycles with the water hardness level set to **3**. The regeneration process occurs at the beginning of the cycle with additional fresh water.

- Single regeneration consumes: ~3L of water;
- Takes up to 5 additional minutes for the cycle;
- Consumes below 0.005kWh of energy.

Remarks: Water softening system not appliable when water hardness level is set to 0.

FILLING THE RINSE AID DISPENSER

Rinse aid makes dish DRYING easier. The rinse aid dispenser **A** should be filled when the RINSE AID REFILL indicator light in the control panel is lit.

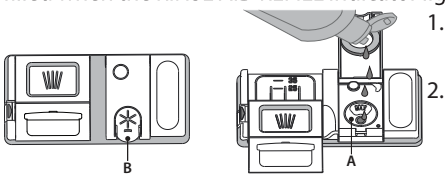

1. Open the dispenser **B** by pressing and pulling up the tab on the lid.
2. Pour in the rinse aid (max.110 ml), making sure it does not overflow from the dispenser. If this happens, clean the spill immediately with a dry cloth.
3. Press the lid down until you hear a click to close it.

NEVER pour the rinse aid directly into the appliance tub.

Adjusting the dosage of rinse aid

If you are not completely satisfied with the drying results, you can adjust the quantity of rinse aid used.
To change, follow instructions in the section "SETTING MENU".
If the rinse aid level is set to ZERO, no rinse aid will be supplied. The **LOW RINSE AID indicator light** will not be lit if you run out of rinse aid.
A maximum of **6** levels can be set according to the dishwasher model.

- If you see bluish streaks on the dishes, set a low number (0-3).
- If there are drops of water or limescale marks on the dishes, set a mid-range number (4-5).

FILLING THE DETERGENT DISPENSER

To open the detergent dispenser use the opening device C. Introduce the detergent into the dry dispenser D only. Place the amount of detergent for pre-washing directly inside the tub.

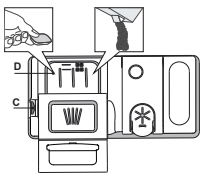

1. When measuring out the detergent refer to the mentioned earlier information to add the proper quantity. Inside the dispenser **D,** there are indications to help the detergent dosing.
2. Remove detergent residues from the edges of the dispenser and close the cover until it clicks.
3. Close the lid of the detergent dispenser by pulling it up until the closing device is secured in place.

The detergent dispenser automatically opens up at the right time according to the program.
Usage of detergent not designed for dishwashers may cause malfunction or damage to the appliance.

DAILY USE

1. **CHECK WATER CONNECTION**
   Check that the dishwasher is connected to the water supply and that the tap is open.
2. **SWITCH ON THE DISHWASHER**
   Press the **ON/OFF** button.
3. **LOAD THE RACKS** *(see LOADING THE RACKS)*.
4. **FILL THE DETERGENT DISPENSER**
5. **CHOOSE THE PROGRAM AND CUSTOMISE THE CYCLE**
   Select the most appropriate program in accordance with the type of crockery and its soiling level *(see PROGRAMS DESCRIPTION)* by pressing the selected **PROGRAM** button.
   Select the desired options *(see OPTIONS AND FUNCTIONS)*. Not all options are compatible with all programs.
6. **START**
   Start the wash cycle by closing the door and pressing **START/Pause** button (led is lit). When the program starts you hear a single beep.
7. **END OF WASH CYCLE**
   The end of the wash cycle is indicated by sound and the display shows **END**. Switch off the appliance by pressing the **ON/OFF** button and opening the door.
   Wait for a few minutes before removing the crockery - to avoid burns. Unload the racks, beginning with the lower one.

MODIFYING A RUNNING PROGRAM

If a wrong program was selected, it is possible to change it, provided that it has only just begun. **RESET** the machine: press and hold the **ON/OFF** button for more than 3. sec., and the machine will switch off. **The dashboard will show "0:01".** Wait until drain cycle ends (around 1 minute). Switch the machine back on using the **ON/OFF** button and select the new wash cycle and any desired options. Start the cycle by pressing the **START/Pause** button.

ADDING EXTRA CROCKERY

Without switching off the machine, open the door first slightly to avoid water splashing out (**START/Pause** led starts blinking) (**Caution!: Hot steam!**) and place the crockery inside the dishwasher. Close the door and press the **START/Pause** button, the cycle will resume from the point at which it was interrupted.

ACCIDENTAL INTERRUPTIONS

If the door is opened during the wash cycle, or if there is a power cut, the cycle stops. Close the door and **ONLY IF YOU PRESS** the **START/Pause** button the cycle will resume from the point at which it was interrupted.

ADVICE AND TIPS

TIPS

Before loading the baskets, remove all food residues from the crockery and empty the glasses. **You do not need to rinse beforehand under running water.**
Arrange the crockery so that it is held in place firmly and does not tip over; and arrange the containers with the openings facing downwards and the concave/convex parts placed obliquely, thus allowing the water to reach every surface and flow freely.
Warning: lids, handles, trays and frying pans should not prevent the sprayer arms from rotating.
Place any small items in the cutlery basket.
Very soiled dishes and pans should be placed in the lower basket because in this sector the water sprays are stronger and allow a higher washing performance.
After loading the appliance, make sure that the sprayer arms can rotate freely.

UNSUITABLE CROCKERY

- Wooden crockery and cutlery.
- Delicately decorated glasses, artistic handicrafts and antique crockery. Their decorations are not resistant.
- Parts in synthetic material which do not withstand high temperatures.
- Copper and tin crockery.
- Crockery soiled with ash, wax, lubricating grease or ink.

The colours of glass decorations and aluminium/silver pieces can change and fade during the washing process. Some types of glass (e.g. crystal objects) can become opaque after a number of wash cycles too.

DAMAGE TO GLASS AND CROCKERY

- Only use glasses and porcelain guaranteed by the manufacturer as dishwasher safe.
- Use a delicate detergent suitable for crockery
- Collect glasses and cutlery from the dishwasher as soon as the wash cycle is over.

TIPS ON ENERGY SAVING

- When the household dishwasher is used according to the manufacturer's instructions, **washing tableware in a dishwasher usually consumes less energy and water than hand dishwashing.**
- In order to maximize dishwasher efficiency, it is recommended to **initiate the wash cycle once the dishwasher is fully loaded**. Loading the household dishwasher up to the capacity indicated by the manufacturer will contribute to energy and water savings. Information on the correct loading of tableware can be found in the Loading chapter. In case of partial loading, it is recommended to use a dedicated wash options if available (Half load/ Zone Wash/ Multizone), filling up only selected racks. Incorrect loading or overloading of the dishwasher may increase resources usage (such as water, energy and time, as well as increase noise level), reducing cleaning and drying performance.
- Manual pre-rinsing of tableware items leads to increased water and energy consumption and is not recommended.

HYGIENE

To avoid odour and sediment which can be accumulated in the dishwasher **please run a high-temperature program at least once a month**. Use a teaspoon of detergent and run it without loading to clean your appliance.

RESISTANCE TO FROST

If the appliance is placed in surroundings exposed to the risk of frost, it **must be drained completely.** Turn off the water tap, remove the inlet and outlet hoses, and let all the water drain away. **Make sure that the water softener is full of dissolved regeneration salt in the salt container**, to protect the appliance from temperatures of up to -20°C.
If the appliance was stored in frost conditions the appliance must remain at an ambient temperature of min. 5°C for **at least 24 hours** before the first run.

PROGRAMS TABLE

Program	Programs description		Drying phase	NaturalDry	Available options *)	Duration of wash program (h: min)**)	Water consumption (litres/cycle)	Energy consumption (kWh/cycle)
Eco	**Eco** 50°- Environmentally - friendly wash cycle with low energy consumption level. Standard cycle suitable to wash normally soiled load.		√	√	POWER CLEAN, ½, EXTRA DRY, SILENT, SANI RINSE, DELAY	3:40	11.15	0.62
A	**Auto Intensive** 65° **-** Automatic program for heavily soiled crockery, especially for pots and saucepans (not be used for delicate item)	Senses the level of soiling on the dishes and adjusts the program accordingly. When the sensor is detecting the soil level an animation appears in the display and the cycle duration is updated.	√	√	POWER CLEAN, ½, EXTRA DRY, SILENT, SANI RINSE, DELAY	2:25 - 3:10	15.5 - 24.5	1.30 - 1.70
A	**Auto Mixed** 55° **-** Automatic program for mixed soiled dishes with dried food residues.		√	√	POWER CLEAN, ½, EXTRA DRY, SILENT, SANI RINSE, DELAY	1:20 - 3:00	7.5 - 19.5	0.75 - 1.20
A	**Auto Fast** 50° **-** Automatic program for everyday mixed soiled crockery. Ensures optimal cleaning and drying performance in a shorter time.		√	√	POWER CLEAN, ½, EXTRA DRY, SILENT, SANI RINSE, DELAY	1:00 - 1:50	7.5 - 15.5	0.70 - 1.10
	Rapid 45° **-** Program to be used for lightly -soiled dishes with not dried food residues. Does not include the drying phase. Recommend throw detergent on the bottom of dishwasher.		-	√	½, EXTRA DRY, SILENT, SANI RINSE, DELAY	0:30 - 0:40	10.0 - 12.0	0.55 - 0.65
	Crystals 45° **-** Program for delicate items, which are more sensitive to high temperatures, for example, glasses and cups.		√	√	½, EXTRA DRY, SILENT, DELAY	1:40 - 1:50	12.5 - 16.5	0.95 - 1.20
	Prewash - Use to refresh crockery planned to be washed later. No detergent is to be used with this program.		-	√	½, DELAY	0:12	4.5	0.10
	Self-Clean 65° **-** Program to be used to perform maintenance of the dishwasher, to be carried out only when the dishwasher is EMPTY using specific detergents designed for dishwasher maintenance.		-	-	SANI RINSE, DELAY	1:15	11.0	1.10

Singapore Water efficiency program.
The "Eco" program is the recommended program for normally soiled tableware (standard cleaning cycle) at rated load capacity, in accordance with the IEC 60436:2015 standard.

Pre-treatment of the dishes is not needed before any of the programs.
**) Not all options can be used simultaneously.*
***) The duration of the program shown on the display or in the booklet is an estimate calculated on standard conditions. The actual time may vary depending on many factors such as temperature and pressure of the incoming water, room temperature, amount of detergent, quantity and type of load, load balancing, additional selected options and sensor calibration. The sensor calibration can increase program duration up to 20 min.*

WARNING: Dishwasher detergents are strongly alkaline. They can be extremely dangerous if swallowed. Avoid contact with the skin and eyes and keep children away from the dishwasher when the door is open. Check that the detergent receptacle is empty after completion of the wash cycle.

OPTIONS AND FUNCTIONS

OPTIONS can be selected/ deselected, after choosing the program, directly by pressing the corresponding button (if available - the indicator lights up) *(see CONTROL PANEL)***. If an option is not compatible with the selected program** *(see PROGRAMS TABLE)***, the corresponding LED flashes rapidly 3 times and beeps will sound. The option will not be enabled. An option can change time or water or energy consumption for the program.**

POWER CLEAN **POWER CLEAN® -** Thanks to the additional power jets this option provides a more intensive and powerful wash in the lower rack, in the specific area. This option is recommended for washing pots and casseroles (please refer to the Power Clean® in loading section).

½ **HALF LOAD -** If there are not many dishes to be washed, HALF LOAD is used to save water, electricity or time, depending on the selected program. **Remember to reduce the amount of detergent.**

EXTRA DRY - The higher temperature during the final rinse and the extended drying phase allows for improved drying. The EXTRA DRY option results in the lengthening of the wash cycle.

SILENT - Suitable for night-time operation of the appliance. This option can be used to limit noise emissions during wash phases. It will increase cycle time depending on base cycle selection.

SANI RINSE - This option can be used to sanitize washed dishes. It will increase the final rinse temperature and add an antibacterial wash to the selected program. Ideal to clean crockery and feeding bottles. The dishwasher door must be kept shut for the entire duration of the program in order to guarantee a reduction of germs. **WARNING: the crockery and plates could be extremely hot at the end of the cycle.**

SENSING - When the sensor is detecting the soil level an animation appears in the display (around 20 min.) and the cycle duration is updated. SENSING is for the level of soiling on the dishes and is present for all cycles (excepting Eco) adjusting the program accordingly.

KEYLOCK - A long press (for 3 seconds) of SILENT button, will activate the KEYLOCK function. The KEYLOCK function will block the control panel except for the ON/OFF button. To deactivate the KEYLOCK, long press again.

WATER TAP CLOSED - Alarm - Flashes, when there is no inlet water or water tap is closed.

DELAY - The start of the program may be delayed for a period of time between **0:30** and **24** hours.

1. Select the program and any desired options. Press the DELAY button (repeatedly) to delay the start of the program. Adjustable from 0:30 to 24 hours. Once the 24 hours setting is reached, press the DELAY another time to deactivate the DELAY function.
2. Close the door and press the START/Pause button. The timer will begin counting down.
3. Once this time has elapsed, the indicator light switches off and the program begins automatically.

The DELAY function cannot be set once a program has been started.

DESCALE - Alarm - Limescale accumulation was detected on internal components of the appliance. Check if the **Water Hardness Setting** is at the correct value and **salt** is present in the salt container *(see FIRST TIME USE)*, then **use a descaling product** (WPro brand is recommended) with **Self-Clean program**. After a successful descaling, the icon will stop being displayed. If the actions above are not performed, product performance will deteriorate. DESCALE warning will start blinking and «**dES**» alarm will appear on the display. If still no action is taken, the appliance will only allow a certain number of cycles to be started (indicated during «**dES**» alarm display) and then will be **BLOCKED** to prevent component damage, **with only the Self-Clean program available**. Performing a full descaling will unblock the product. In the case of extremely high amounts of limescale, descaling may have to be performed twice to be efficient.

NaturalDry - It is a convection drying system which automatically opens the door during/after the drying phase to ensure exceptional drying performance every day. The door opens at a temperature that is safe to your kitchen furniture, thus door will not be opened when the option of SANI RINSE is on. As additional steam protection, specially designed protection foil is added together with the dishwasher. To see how to mount protection foil please refer to the INSTALLATION GUIDE.
This feature is active by default, but it is possible to deactivate it in the "SETTING MENU".

LOADING THE RACKS

CAPACITY: **15** standard place-settings

CUTLERY RACK

The third rack was designed to house the cutlery. Arrange the cutlery as shown in the figure.
A separate arrangement of the cutlery makes collection easier after washing and improves washing and drying performance**.**

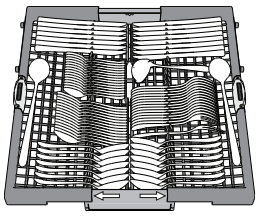

Knives and other utensils with sharp edges must be positioned with the blades facing downwards.

The cutlery rack is equipped with two sliding side trays to make the most of the height of the space below and enable the loading of high items into the upper rack.

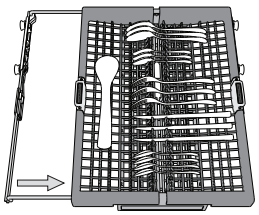

UPPER RACK

Load delicate and light dishes: glasses, cups, saucers, low salad bowls.
The upper rack has tip-up supports which can be used in a vertical position when arranging tea/ dessert saucers or in a lower position to load bowls and food containers.

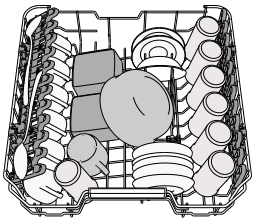

(loading example for the upper rack)

Adjusting the height of the upper rack

The height of the upper rack can be adjusted: a high position to place bulky crockery in the lower basket and low position to make the most of the tip-up supports by creating more space upwards and avoiding collision with the items loaded into the lower rack.
The upper rack is equipped with an **Upper Rack height adjuster** (see figure), without pressing the levers, lift it up by simply holding the rack sides, as soon as the rack is stable in its upper position. To restore to the lower position, press the levers **A** at the sides of the rack and move the basket downwards.

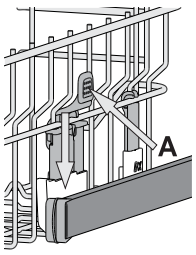

We strongly recommend that you do not adjust the height of the rack when it is loaded.

NEVER raise or lower the basket on one side only.

Foldable flaps with adjustable position

The side foldable flaps can be folded or unfolded to optimize the arrangement of crockery inside the rack. Wine glasses can be placed safely in the foldable flaps by inserting the stem of each glass into the corresponding slots.
Depending on the model:

- to unfold the flap there is needed to slide it up and rotate or release it from the snaps and pull it down.
- to fold the flap there is needed to rotate it and slide flap down or pull it up and attach flap to the snaps.

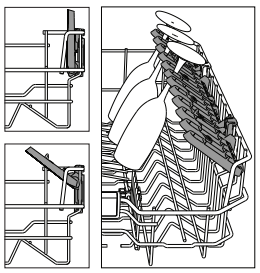

LOWER RACK

For pots, lids, plates, salad bowls, cutlery etc. Large plates and lids should ideally be placed at the sides to avoid interferences with the spray arm.
The lower rack has tip-up supports which can be used in a vertical position when arranging plates or in a horizontal position (lower) to load pans and salad bowls easily.

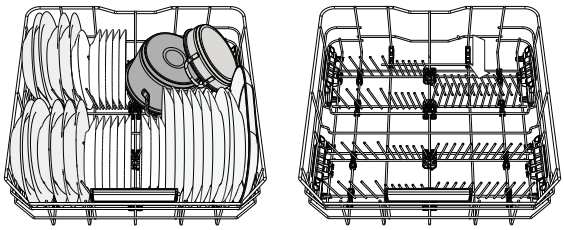

(loading example for the lower rack)

POWER CLEAN®

Power Clean® uses the special water jets in the rear of cavity to wash more intensively the highly dirty items. The lower rack has a Space Zone, a special pull-out support in the rear of the rack that can be used to support frying pans or baking pans in upright position, thus taking up less space.

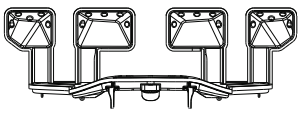

Placing the pots/casseroles faced to the Power Clean® component please activate the **POWER CLEAN®** on the panel.
How to use Power Clean®:

1. Adjust the Power Clean® area **G** folding down the rear plate holders to load pots.
2. Load pots and casseroles inclined vertically in Power Clean® area. Pots have to be inclined towards the powerful water jets.

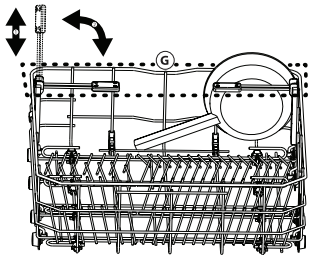

CARE AND MAINTENANCE

CLEANING THE FILTER ASSEMBLY

Regularly clean the filter assembly so that the filters do not clog and that the waste water flows away correctly.
Using the dishwasher with clogged filters or foreign objects inside the filtration system or spray arms may cause unit malfunction resulting in loss of performance, noisy work or higher resources usage.
The filter assembly consists of three filters which remove food residues from the washing water and then recirculate the water.
The dishwasher must not be used without filters or if the filter is loose.
At least once per month or after every 30 cycles, check the filter assembly and if necessary clean it thoroughly under running water, using a non-metallic brush and following the instructions below:

1. Turn the cylindrical filter **A** in an anti-clockwise direction and pull it out *(Fig 1)*. **It is important when reinstalling the filter that the two triangles shown on the zoom meet.**
2. Remove the cup filter **B** by exerting a slight pressure on the side flaps *(Fig 2)*.
3. Slide out the stainless-steel plate filter **C** *(Fig 3)*.
4. In case you find foreign objects (such as broken glass, porcelain, bones, fruit seeds etc.) **please remove them carefully**.
5. Inspect the trap and remove any food residues. **NEVER REMOVE** the wash-cycle pump protection (shown by an arrow) *(Fig 4)*.

After cleaning the filters, replace the filter assembly and fix it in position correctly; this is essential for maintaining the efficient operation of the dishwasher.

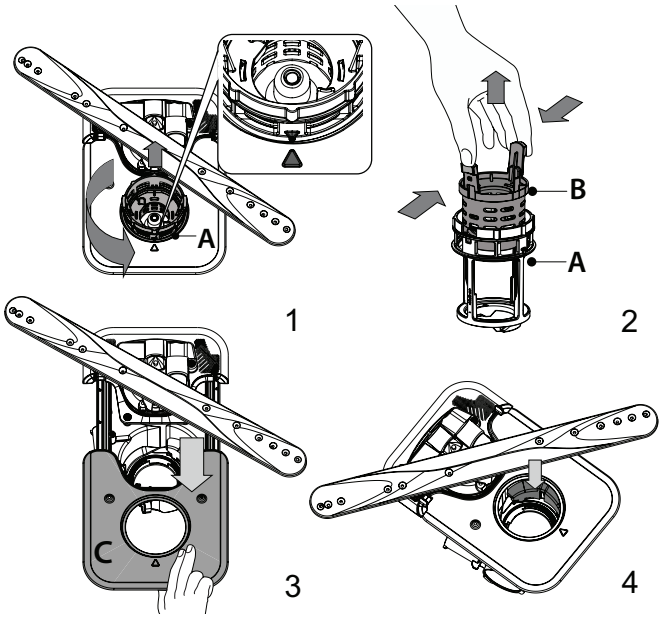

CLEANING THE SPRAY ARMS

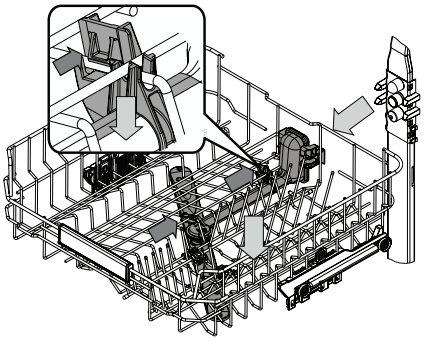

On occasions, food residue may become encrusted onto the spray arms and block the holes used to spray the water. It is therefore recommended that you check the arms from time to time and clean them with a small non-metallic brush.

To remove the upper spray you must remove it together with the manifold.

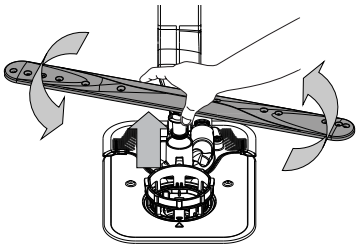

The lower spray arm may be removed by pulling it upwards and rotating it anti-clockwise. Mounting back the spray arm is by pulling it down and rotating it clockwise.

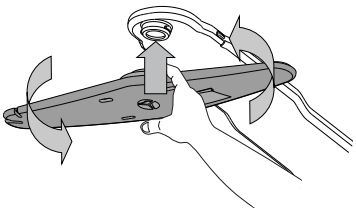

The top spray arm may be removed by pressing it up and then rotating it anti-clockwise. Mounting back the spray arm is by pulling it upwards and rotating it clockwise.

TROUBLESHOOTING

In case your dishwasher doesn't work properly, check if the problem can be solved by going through the following list.
For other errors or issues please contact authorized After-sales Service whose contact details can be found in the warranty booklet.

PROBLEMS	POSSIBLE CAUSES	SOLUTIONS
The salt indicator is lit	Salt reservoir is almost empty.	Refill the reservoir with salt (for more information - *see FILLING THE SALT RESERVOIR*). Check the water hardness setting if necessary - *see WATER HARDNESS TABLE*.
The salt indicator is blinking	Salt reservoir is empty.	Refill the reservoir with salt as soon as possible. Using the appliance without salt may cause damage to its internal components.
The rinse aid indicator is lit or blinking	Rinse aid dispenser is empty. (After refill the rinse aid indicator may remain lit for a short time).	Refill the dispenser with a rinse aid (for more information - *see FILLING THE RINSE AID DISPENSER*).
Descale indicator is lit or blinking; «**dES**» alarm is displayed.	Limescale is accumulating on internal components of the appliance.	Descale the appliance immediately using the Self Clean program and a commercially available descaling product *(see OPTIONS AND FUNCTIONS)*. Refill the reservoir with salt. Check the water hardness setting. If the appliance is not descaled, it will stop functioning.
The dishwasher won't start or does not respond to commands.	The appliance has not been plugged in properly.	Insert the plug into the socket.
	Power outage.	For safety reasons, the dishwasher will not restart automatically when power returns. Close the door and press START/Pause button.
	The dishwasher door is not closed. NaturalDry pin is not pulled in.	Vigorously push the door until you hear the "click".
	A cycle is interrupted by the door opening for more than 4 seconds.	Close the door within 4 seconds and press START/Pause button.
	The control panel does not respond or **F6 E1** is displayed.	Switch off the appliance by pressing the ON-OFF/Reset button, switch it back on after approximately one minute and restart the program. If the problem persists, unplug the appliance for 1 minute, then plug it back in.
The dishwasher won't drain. Display shows: **F7 E3** or **F9 E1**	The filter is clogged with food residues or limescale.	Clean the filter and descale the appliance *(see CLEANING THE FILTER ASSEMBLY and DESCALE INSTRUCTION)*.
	The drain hose is kinked.	Check the drain hose *(see INSTALLATION INSTRUCTIONS)*.
	The sink drain pipe is blocked.	Clean the sink drain pipe.
The dishwasher makes excessive noise.	Dishes are rattling against each other.	Position the crockery correctly *(see LOADING THE RACKS)*.
	An excessive amount of foam is present.	The detergent has not been measured out correctly or it is not suitable for use in dishwashers *(see FILLING THE DETERGENT DISPENSER)*. Restart the current cycle by switching OFF the dishwasher, then switch it on again, select a new program, close the door and press START/Pause button. Please do not add any detergent.
	Crockery has not been arranged properly.	Arrange the crockery correctly *(see LOADING THE RACKS)*.
	The filter is clogged with food residues or limescale.	Clean the filter assembly *(see CARE AND MAINTENANCE)*.
The dishes are not clean.	Crockery has not been arranged properly.	Arrange the crockery correctly *(see LOADING THE RACKS)*.
	Spray arms cannot rotate freely, being hindered by the dishes.	Arrange the crockery correctly *(see LOADING THE RACKS)*. Check that the upper rack is in the correct position and adjust (lift up) if necessary.
	The wash cycle is too gentle.	Select an appropriate wash cycle *(see PROGRAMS TABLE)*.
	An excessive amount of foam is present.	The detergent has not been measured out correctly or it is not suitable for use in dishwashers *(see FILLING THE DETERGENT DISPENSER)*.
	The cap on the rinse aid compartment has not been closed correctly.	Make sure the cap of the rinse aid dispenser is closed.
	The filter is clogged with food residues or limescale.	Clean the filter and descale the appliance *(see CLEANING THE FILTER ASSEMBLY)*.
	The salt reservoir is empty.	Fill the salt reservoir *(see FILLING THE SALT RESERVOIR)*.

PROBLEMS	POSSIBLE CAUSES	SOLUTIONS
The dishwasher does not fill the water. The display shows: **H2O** and ∅ is lit; acoustic alarm sounds.	No water in the water supply or the tap is closed.	Make sure there is water in the water supply and the water tap is open.
	The water inlet hose is kinked.	Check the inlet hose *(see INSTALLATION)*. Close the door and press START/Pause button.
	The screen in the water inlet hose is clogged; it is necessary to clean it.	Check and clean the screen in the water inlet hose. Close the door and press START/Pause button.
The dishwasher finishes the cycle prematurely. The display shows: **F8 E3**	The filter is clogged with food residues or limescale.	Clean the filter and descale the appliance *(see CLEANING THE FILTER ASSEMBLY and DESCALE INSTRUCTION)*.
	Drain hose positioned too low or siphoning into the home sewage system.	Check if the end of the drain hose is placed at the correct height *(see INSTALLATION)*. Check for siphoning into the home sewage system, and install a siphon breaker/air admittance valve if necessary.
	An excessive amount of foam is present.	The detergent has not been measured out correctly or it is not suitable for use in dishwashers *(see FILLING THE DETERGENT DISPENSER)*.
	Air in the water supply.	Check water supply for leaks or other issues letting air inside.
The dishes are not dried well.	Rinse aid is not present or the dosage is too low.	Make sure the rinse aid dispenser is filled *(see FILLING THE RINSE AID DISPENSER)*. Multifunctional tablets only will not provide as good drying effects as the actual use of liquid rinse aid.
	The dishes have been unloaded after the door was opened automatically but before the actual cycle end.	Make sure the cycle has ended before starting to unload the dishes *(see DAILY USE)*. For even better drying results, it is recommended to let the dishes sit inside the dishwasher with the door open for additional 15 minutes after the cycle ends.
	The dishes are sitting too flat.	If you notice puddles of water inside cavities of cups, mugs or bowls, try loading the dishes (especially in the upper rack) providing more inclination to let larger amounts of water drip down before drying starts.
	The selected cycle does not have the drying phase.	Please check in the *PROGRAMS TABLE* if the selected program is equipped in the drying phase. A cycle without the drying phase may not deliver desired drying efficiency, so it is recommended to change cycle selection for the one that has the drying phase.
	The dishes are made of non-stick or plastic.	Some water drops remaining on this type of material are normal.
Dishes and glasses have blue streaks or bluish tinges.	Rinse aid dosage is excessive.	Adjust the dosage to a lower setting.
Dishes and glasses are covered with limescale or a whitish film.	The salt reservoir is empty.	Refill the reservoir with salt as soon as possible. Using the appliance without salt may cause damage to its internal components.
	The water hardness setting is too low.	Increase the setting *(see WATER HARDNESS TABLE)*.
	The cap of the salt reservoir is not properly closed.	Check and close the salt reservoir cap.
	The rinse aid reservoir is empty or the rinse aid dosage is insufficient.	Refill the dispenser with rinse aid and check the dosage setting (for more information - see *FILLING THE RINSE AID DISPENSER*).
The dishwasher shows **F8 E5**	Valve is blocked or faulty.	Close the water tap, if possible. Do not switch off the power supply. Call the service.

Policy and standard documentation and additional product information can be found by:

- Visiting our website: **www.whirlpool.com.hk** or **www.whirlpool.com.sg**
- Alternatively, **contact our After-sales Service** (See phone number in the warranty booklet).
  When contacting our After-sales Service, please state the codes provided on your product's identification plate.

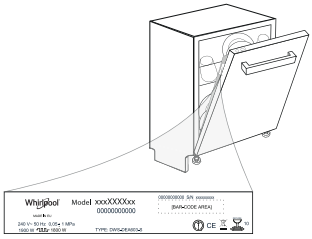

Register your product online

香港 Hong Kong

Scan QR Code or visit:
www.whirlpool.com.hk
to register your product warranty online.
This QR Code is only applicable to Hong Kong.
For more information, please contact our
Customer Service Hotline: (852) 2406 9138

Save the plant and register your product warranty online!
Enjoy extra 1-month free warranty upon online registration.

掃描二維碼或到訪:
www.whirlpool.com.hk
線上注册您的產品保養。
此碼僅適用於香港。
想要瞭解更多資訊，請聯繫我們的
客戶服務熱線: (852) 2406 9138。

「惠」環保出力，減少用紙！ 於網上登記產品
更可獲額外多一個月保養。

新加坡 Singapore

Scan QR Code or visit:
www.whirlpool.com.sg/warranty-registration
to register your product warranty online.
This QR Code is only applicable to Singapore.
For more information, please contact our
Customer Service Hotline: +65 6250 6888 or
Email: **helpdesk.sg@whirlpool.com**

掃描二維碼或到訪
www.whirlpool.com.sg/warranty-registration
線上注册您的產品保養。
此碼僅適用於新加坡。
想要瞭解更多資訊，請聯繫我們的
客戶服務熱線:+86 6250 6888 或
電子郵件: **helpdesk.sg@whirlpool.com**。

400011682383E
10/2025