CANTINA

WINE CARE

190L Outdoor Beverage Centre, Black

CBF190B

V1.3 0926

Contents

03 Welcome

04 Safety Information

09 Your Beverage Centre

10 Installation Instructions

12 Operating Instructions

15 Troubleshooting

17 Cleaning & Maintenance

18 Technical Specifications

19 Purchase Details

22 Warranty Information

Welcome

Residentia Group

Office	165 Barkly Avenue Burnley Victoria Australia 3121
ACN	70 600 546 656
Online	residentia.group cantinawinecare.com
Post	PO BOX 5177 Burnley Victoria Australia 3121
Phone	1300 11 4357
Email	support@residentia.group

Congratulations on purchasing your new Outdoor Beverage Centre!

Cantina is distributed, designed and engineered in Australia by Residentia Group Pty Ltd.

Please refer to the warranty chapter at the rear of this manual for information regarding your product's parts and labour warranty, or visit us online at:

→ www.cantinawinecare.com

Here at Residentia Group, we are customer obsessed and our Support Team are there to ensure you get the most out of your appliance. Should you want to learn more about your unit, and importantly, taking care of the appliance, our Support Team are here to help. You can use our online Support Centre at any time by visiting:

→ www.support.residentiagroup.com.au

Or you can contact us by dialling: 1300 11 HELP (4357)

It is important that you read through the following user manual thoroughly, in order to familiarise yourself with the installation and operation requirements of your appliance, and to ensure optimum performance.

Again, thank you for choosing an Cantina and we look forward to being of service to you.

Kind Regards,

The Residentia Team

Customer Care
At Residentia Group, we strongly encourage the use of authentic spare parts to guarantee the best results. When contacting our spare parts team through 1300 11 HELP, or by emailing parts@residentiagroup.com.au, please ensure that you have the model and serial numbers on hand, which are found on your appliances' rating plate.

Safety Information

Important Safety Instructions

Read Carefully and Keep for Future Reference

Read this manual thoroughly before first use, even if you are familiar with this type of product. The safety precautions enclosed herein reduce the risk of fire, electric shock and injury when correctly adhered to. Make sure you understand all instructions and warnings.

Keep the manual in a safe place for future reference, along with the completed warranty card and purchase receipt. If you sell or transfer ownership of this product, pass on these instructions to the new owner.

Always follow basic safety precautions and accident prevention measures when using an electrical appliance. The following statements you will see in this booklet have these meanings:

WARNING: Indicating information concerning your personal safety.

CAUTION: Indicating information on how to avoid damaging the appliance or cabinetry.

IMPORTANT: Indicating tips and information about use of the appliance.

Usage Conditions and Restrictions

- Domestic use only: This appliance is intended for indoor household use only. It is not intended for commercial, industrial or outdoor use. It is not intended for use in a recreational vehicle.
- Purpose: Do not use this appliance for anything other than its intended purpose. Other uses are not recommended and may cause fire, electric shock or personal injury.
- Attachments: The use of attachments is not recommended by the appliance manufacturer and distributor as they may be hazardous.
- Improper use: Damage due to improper use, or repairs made by unqualified personnel will void your warranty. We assume no liability for any eventual damages caused by misuse of the product or non-compliance with these instructions.

Before Using Your Appliance

This manual explains the proper use of your Canina Outdoor Beverage Centre. Please read this manual carefully before using the product.
This manual should be kept in a safe place for handy reference.

This Outdoor Beverage Centre is a domestic appliance which has been manufactured and tested to comply with Australian and New Zealand Standards.

This Outdoor Beverage Centre must only be installed in accordance with the instructions provided. Incorrect installation may cause harm
to persons, damage property and void the product's warranty.

Read the following carefully to avoid damage or injury.

IMPORTANT: Check for any damage or marks. If you find the appliance is damaged or marked, you must report it within 7 days if you wish to claim for damage/ marks under the manufacturer's warranty. This does not affect your statutory rights.

Safety Instructions

- Before the installation and use of the appliance, carefully read the supplied instructions.
- The manufacturer is not responsible if an incorrect installation and use causes injuries and damages.
- Always keep the instructions with your appliance for future reference.
- If you will not use the appliance for a long time, it is advised to turn the plug off.

WARNING: To prevent any damages to your and others' life or property, you have to follow these safety instructions.

WARNING: When positioning the appliance, ensure the supply cord is not trapped or damaged.

WARNING: Do not locate multiple portable socket-outlets or portable power supplies at the rear of the appliance.

Children & Vulnerable People Safety

WARNING: Risk of suffocation, injury or permanent disability.

This appliance is not intended for use by persons (including children) with reduced physical, sensory or mental capabilities, or lack of experience and knowledge, unless they have been given supervision or instruction concerning use of the appliance by a person responsible for their safety.

- Children should be supervised to ensure that they do not play with the appliance.
- Keep all packaging away from children.
- Cleaning and user maintenance shall not be made by children without supervision.

Electrical Connection

CAUTION: Risk of fire and electrical shock!

- Ensure the appliance's plug is easily accessible.
- Ensure proper grounding of the appliance before operation. The appliance must be earthed.

CAUTION: If you are unsure about grounding instructions, consult a qualified electrician or service person. Wait at least 5 minutes before reconnecting the power cord to prevent freezer failure.

- Make sure that the electrical information on the rating plate agrees with the power supply. If not, contact an electrician.
- Always use a correctly installed shockproof socket.
- Do not use any multi-plug adapters or extension cables.

WARNING: Incorrect grounding may lead to breakdowns or electric shocks. Use a dedicated outlet; using multiple devices on one outlet may cause fire hazards. Avoid positioning the power plug upwards or in a squeezed space at the back of the fridge to prevent water damage or fire risk.

- Ensure the supply cord is not trapped or damaged during positioning.
- Connect the mains plug to the mains socket only at the end of the installation. Make sure that there is access to the mains plug after the installation. Do not connect the appliance plug with a power connection board.
- Do not pull the mains cable to disconnect the appliance. Always pull the mains plug.
- Do not touch the mains cable or the mains plug with wet hands.

WARNING: If the supply cord is damaged, it must be replaced by the manufacturer or its service agent or similarly qualified person in order to avoid a hazard.

WARNING: All electrical work must be done in accordance with local and national electrical codes as applicable and should be undertaken by licenced and qualified persons only. Failure to follow these instructions can result in death, fire or electrical shock.

This product operates on 220-240V/50Hz only.
It cannot be used with frequencies other than 50Hz.

To ensure safety, the socket and its cable must be capable of withstanding a current of above 10A.

Safety Information (Continued)

Appliance Placement

- Use this appliance in a domestic household only.
- Avoid installing it in wet or high humidity environments to prevent deterioration and electrical hazards.
- Install the appliance in a dry, well-ventilated room close to a wall outlet for easy access to power supply in case of accidents.
- Avoid exposing the unit to extreme heat or open flame, and ensure adequate airflow around the unit to prevent electric shock or injury.
- Do not cover or obstruct any ventilation areas of the unit to avoid electric shock or injury.

Care & Cleaning

CAUTION: Risk of injury or damage to the Outdoor Beverage Centre.

- Before installation or cleaning, disconnect the appliance from the power source and reset temperature controls. Reconnect and reset after completing tasks.
- Unplug the power cord when cleaning or handling the interior lamp to prevent electric shock or injury. Use a dry, clean cloth to remove water or dust from the power plug; do not touch it with wet hands. Ensure the power cord is not bent or pressed by heavy objects to avoid damage.
- Do not use a steam cleaner on the appliance.
- Avoid spraying water inside or outside the fridge or cleaning it with benzene or thinner.
- Use caution with cleaning agents; acidic cleaners, abrasive brushes, sharp tools, or those containing benzene should not be used.
- Clean the appliance with a moist soft cloth. Only use neutral detergents. Do not use abrasive products, abrasive cleaning pads, solvents or metal objects.

Appliance Use

WARNING: Risk of fire, explosion, electric shock or damage to the appliance.

WARNING: Keep ventilation openings, within the appliance enclosure or surrounding the appliance, clear of obstruction.

WARNING: This appliance is not suitable for food storage and must not be used to store food inside.

- Do not change the specification of this appliance.
- Do not store explosive substances such as aerosol cans with a flammable propellant in this appliance.
- Please do not close the appliance door with excessive force
- Avoid placing heavy or dangerous objects inside the appliance, as they may cause injury, fire, or electric shock.
- Do not use a dryer or light a candle inside the unit, as it may cause explosion or fire.
- Avoid clinging to the door, especially for children, to prevent the appliance from falling and causing serious injuries or death.
- Opening the door for long periods can cause a significant increase of the temperature in the compartments of the appliance.
- Clean regularly surfaces that can come in contact with drink and accessible drainage systems.
- Clean water tanks if they have not been used for 48 h, flush the water system connected to a water supply if water has not been drawn for 5 days.
- If the refrigerating appliance is left empty for long periods, switch off, defrost, clean, dry, and leave the door open to prevent mould developing within the appliance.
- This appliance contains the coolant Isobutane (R600a), a natural gas which is environmentally friendly. Although it is flammable, it does not damage the ozone layer and does not increase the greenhouse effect. The use of this coolant has, however, led to a slight increase in the noise level of the appliance. In addition to the noise of the compressor, you might be able to hear the coolant flowing around the system. This is unavoidable, but does not have any adverse effect on the performance of the appliance.



The refrigerant (R600a) is flammable.

Symbol ISO 7010 W021
WARNING: Risk of fire/flammable materials!

To avoid contamination of drinks, pay attention to the following:

- Opening the door for long periods of time can cause a significant increase in the temperature in the compartments of the appliance.
- Only store beverages in sealed containers.
- Do not overload the cabinet.
- Only open the door when necessary.
- This is a self-defrosting appliance. The compressor will not run during the twenty minutes defrost cycle.
- Do not pull the shelves beyond the anti-stop position when fully loaded.
- This appliance is intended to be used exclusively for the storage of beverages.
- In the event of a power failure, leave the door closed as much as possible to maintain the internal working temperature. Should the power failure continue for a prolonged period, you should take steps to protect the contents of the beverage centre against a rise in temperature. The beverage centre will remember the selected temperature setting and revert to these setting once the power is restored.

Disposal of the Appliance

- Disconnect the appliance from the mains supply, cut off the mains cable and discard it.
- Remove the doors and secure shelves before discarding old refrigerators or freezers to prevent injury or children and pet entrapment.
- When discarding the unit, keep it away from extreme heat sources due to flammable refrigerant and foaming agent.
- Adhere to local laws and regulations when discarding the appliance.
- Old appliances should not simply be disposed of with normal household waste and should be delivered to a collection and recycling centre for electric and electronic equipment. A symbol shown on the product, the instruction manual or the packaging shows that it is suitable for recycling.

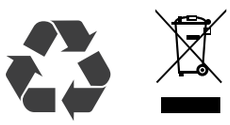

- Dispose of refrigerant and insulation blowing gas at authorised waste disposal centers. Avoid exposing them to extreme heat or open flames.
- The packaging is designed to protect the appliance from damage during transportation. The packaging materials are environmentally friendly and should be recycled. Recycling the packaging can reduce the use of raw materials in the manufacturing process and the amount of waste in landfill sites
- Packaging materials of the product are manufactured from recyclable materials in accordance with our National Environment Regulations. Do not dispose of the packaging materials together with the domestic or other wastes. Take them to the packaging material collection points designated by the local authorities.
- Materials used inside the appliance are recyclable and are labelled with information concerning this. By recycling materials or other parts from used devices you are making a significant contribution to the protection of our environment.
- Information on appropriate disposal centres for used devices can be provided by your local authority.

Safety Information (Continued)

Unpacking

- During transportation, protective packaging was used to protect the appliance against any damage. After unpacking, please dispose of all elements of packaging in a way that will not cause damage to the environment.
- Remove the packaging box and take off the top foam.
- Remove the protective foam from the sides and inside the Outdoor Beverage Centre.
- Lift the Outdoor Beverage Centre with assistance to remove the foam pad underneath.
- Open the Outdoor Beverage Centre door and take out the installation accessories and other items stored inside.
- All materials used for packaging the appliance are environmentally friendly; they are 100% recyclable and are marked with the appropriate symbol.
- Before switching on your appliance for the first time, ensure it is positioned in it's desired final location and is in it's upright position for at least 24 hours before plugging in and switching on the power, otherwise you may damage the compressor.
- You may experience an odour from the appliance when it is operated for the first time. This is normal and will fade when your appliance starts to cool.
- It is recommended that you remove all the internal and external packaging and clean the interior of the appliance prior to first use. We recommend you wipe all parts with warm water, then rise and dry. Place all parts back into the appliance after cleaning.

WARNING: Do not damage the refrigerant circuit at the rear.

WARNING: If you suspect refrigerant leakage, avoid touching the unit or power outlet. Ventilate the room and, if possible, turn off the unit using the circuit breaker. Contact the manufacturer immediately. Refrigerant can cause serious injury upon contact with skin or eyes; seek medical treatment promptly if exposed.

- Do not install or use a damaged appliance.
- Before installation or cleaning, disconnect the appliance from the power source and reset temperature controls. Reconnect and reset after completing tasks.
- Please contact 1300 11 HELP (4357) to arrange an authorised technician if you need assistance with installing the appliance.

CAUTION: During unpacking, the packaging materials (polythene bags, polystyrene pieces, etc.) should be kept out of reach of children.

Declaration of Compliance

When you have unpacked the appliance, make sure that it has not been damaged in any way. If you have any doubts at all, do not use it: contact a professionally qualified person. Keep packing materials such as plastic bags, polystyrene, or nails out of the reach of children because these are dangerous to children.

Climate Classes

Each appliance has a climate class (shown on the rating label) where it indicates the temperature range of the appliance operation in place. The appliance may not work properly it is left for a long period at a temperature outside the specified range.

- **Extended temperature (SN):**
  This refrigerating appliance is intended to be used at ambient temperatures ranging from 10°C to 32°C.
- **Temperate (N):**
  This refrigerating appliance is intended to be used at ambient temperatures ranging from 16°C to 32°C.
- **Subtropical (ST):**
  This refrigerating appliance is intended to be used at ambient temperatures ranging from 16°C to 38°C.

Refer to the Operating Instructions section of this user manual on how to set temperature of your unit.

Your Outdoor Beverage Centre

Components, Parts and Accessories

Model: CBF190B

A. Black Steel Door Frame

B. Handle (×2)

C. Wire Shelves (×4)

D. Door Lock (×2) (front of door)

E. Base with Ventilation

F. Levelling Legs (×4)

G. Electronic Control Panel

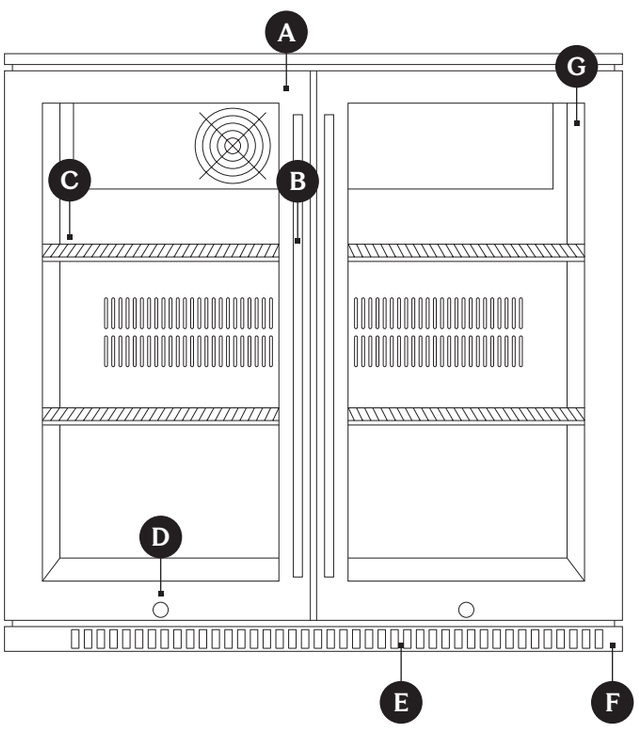

Note: The diagrams and images in this user manual are for explanatory purposes only. Your appliance may appear differently.

Installation Instructions

- Two person installation: Use two or more able-bodied people to move and install the Beverage Centre. Failure to do so can result in back or other injury.
- Floor surface: This Beverage Centre must be properly positioned on a dry, sturdy, level surface that is strong enough to support it when it is fully loaded.
- Location: We recommend that this Beverage Centre is installed in a sheltered location with the required power safely accessible. For example: an alfresco area, under a protected verandah or in a garage. Please ensure it is not left in the weather or in direct sunlight and it is always protected from rain, water or excessive moisture.
- Tropical Rating: This rating allows the Beverage Centre to be operating effectively in temperatures up to 43° C.
- Do NOT install/use the Beverage Centre in the following locations/ situations:
- In a recreational vehicle, or for use with an inverter.
- In direct sunlight, near heat sources, next to an open flame, cooking or heating appliance, or near any other source of high heat.
- Direct sunlight may affect the acrylic coating and heat sources may increase the unit's power consumption. For best energy efficiency install the Beverage Centre in the coolest location within the area it is placed.
- In an area with extreme cold ambient temperatures.
- During camping.
- In an area with excessive moisture and high humidity. Make sure it is protected from elements such as wind, rain, water spray or drips.
- In an area where petrol or other explosive and/or flammable liquids or fumes are used or stored. The fumes can create a fire hazard or explosion.
- Levelling: It is important for the Beverage Centre to be level in order to work properly. To level the unit, adjust the levelling legs at the bottom of the Beverage Centre. See page 9 for more details on this.
- Ventilation: To allow for proper air ventilation, leave a minimum 5cm of space between the top and rear of the Beverage Centre and make sure that the front of the unit is completely unobstructed. (Refer to Built-in Door Clearances on page 11 for additional side clearances that may be required based on your installation type).
- Ventilation Continued: Ensure that the ventilation openings are never blocked or covered. Never cover shelves with aluminium foil or any other material, which may prevent air circulation.
- Settling: Before connecting the Beverage Centre to the power source, let it stand upright for approximately 8 hours. This will allow any refrigerant gasses that may have been disturbed during the transportation process to settle and reduce the possibility of a malfunction in the cooling system from handling during transport.
- Electrical connection: You should check whether there is an electrical socket available, which will be accessible after your appliance is installed. Plug the Beverage Centre into a dedicated, properly installed wall outlet. Do not under any circumstances cut or remove the third (earth) prong from the power cord. Any questions concerning power and/or earthing should be directed toward a licensed electrician or our after sales support centre.
- After plugging the Beverage Centre in, turn the unit on and allow it to cool down for 3–4 hours before placing beverages in the appliance.

Positioning and Ambient Temperatures

- This Beverage Centre is rated to tropical ambient temperatures. Your Beverage Centre may not function correctly if the ambient temperature exceeds 43° C.
- Your appliance should not be located in direct sunlight or exposed to continuous heat or extremes of temperature (e.g. next to a radiator or boiler). If this is not feasible, then you should install an insulation plate between the appliance and the adjacent heat source.
- Place the Beverage Centre flatly and firmly on a solid base.
- Anything positioned above the Beverage Centre must be at least 5 cm away to allow sufficient cooling of the condenser. You must allow a 5 cm gap to the rear of the appliance.
- Be sure to leave enough space for the opening of the door, to avoid damage to the appliance or personal injury

Built-In or Freestanding Installation

- Your Beverage Centre can be used as a freestanding or a built in unit. The clearances shown in the drawing below (Fig. 1) should be followed for both types of installation.

- In particular, the depth dimension must be observed.

IMPORTANT: The vent at the base of the appliance is for ventilation. Nothing should be placed in front of this vent; otherwise your Beverage Centre may not operate properly.

- A decorative plinth can be fitted to the front of the base vent as long as the cut out of 822mm wide × 40mm high is made in the plinth

- Built-in Door Clearances: Where installed with the doors aligning with adjacent cabinetry (flush mounted), there needs to be a 20mm clearance allowed on each side of the unit (total of 40mm) for the door to open without impacting on the cabinetry.
  If the doors are proud mounted (i.e. positioned forward of any adjacent cabinetry) it can be installed without any space on the sides.

Fig. 1

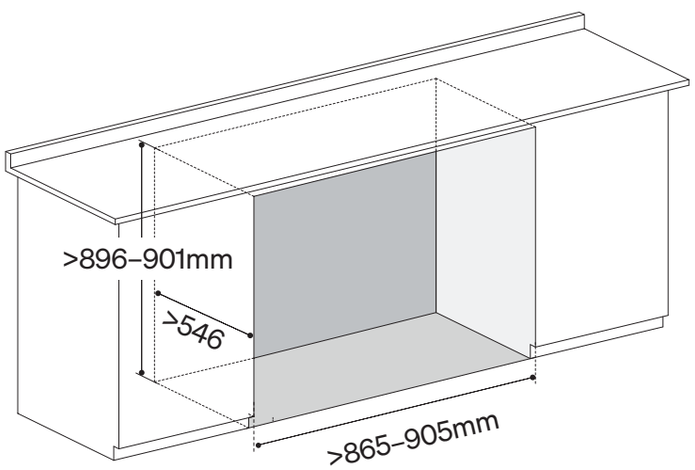

Positioning the Shelves

- Position the shelf supports inside the racks on the sides (as illustrated in Fig. 2) at your required level. You can then place the shelves firmly on the supports and begin to load your contents.

- Note: The maximum load for a shelf is 40kg.

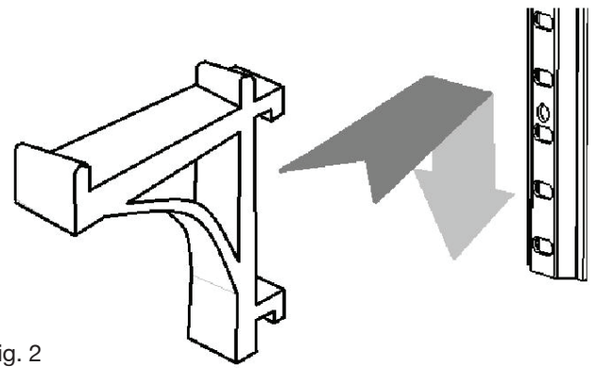

Fig. 2

Operating Instructions

- First use: After delivery, wait for eight hours before connecting the appliance to your mains supply. This will allow any refrigerant gases that may have been disturbed during the transportation process to settle.

- First cooling down: When you first switch on the Beverage Centre, the compressor will run continuously until the Beverage Centre reaches the set temperature. During this period of time, try not to open the door frequently or place bottles inside the appliance. After about 3–4 hours, you can start loading the Beverage Centre.

- Odour: You may notice an odour when you first switch on the Beverage Centre. This is due to the parts being new and is no cause for concern. The odour will subside as the Beverage Centre starts to cool.

- IMPORTANT: When you use the Beverage Centre for the first time or restart it after it has been turned off for a long time, there could be a few degrees variance between the temperature you select and the one indicated on the LED display. This is normal and it is due to the length of activation time. Once the Beverage Centre has been running for a few hours, everything will return back to normal.

- When loading several bottles or cans at once, it will take longer for the appliance to cool the individual bottles than when adding a bottle at a time.

- If the unit is switched off or unplugged, you must allow at least 5 minutes before restarting the Beverage Centre or reconnecting it to your mains supply.

- Turning the Appliance On and Off

- When the Beverage Centre is connected to the power outlet it will turn on automatically.

Normal Operation

- During normal operation the controller display will show the desired temperature that the Beverage Centre is currently set to.

- The appliance will run continuously until it reaches the set temperature. Continuous noise from the compressor and refrigeration system is normal and not a defect.

- The digital display will show the internal cabinet temperature. Note: This may fluctuate as the refrigerator cycles on/off this is not a fault When the refrigerator is in cooling mode the light under the cooling symbol will illuminate. When the refrigerator cycles off the light will not be illuminated.

Operating the Beverage Centre

1. To turn on press the Power button.

2. To turn off press and hold the Power button for 6 seconds the display will disappear. Note: If the unit is unplugged, turned off or power is lost you must wait 3 to 5 minutes before restarting the unit If you attempt to restart without waiting, the refrigerator will not start and may damage the compressor.

Setting the Temperature:

1. Use the Increase/Decrease buttons to select the desired temperature, in 1°C increments.

2. The desired temperature will flash while being changed and will become solid after 3 seconds of no change.

- Swapping from Celsius to Fahrenheit: To change the highlighted temperature scale press both the Increase/Decrease buttons at the same time for 2 seconds. The selected scale will glow.

- Internal Light: To turn the light on, press the Light button.

- To turn the light off, press the Light button again.

- It is recommended that the light be turned on only when required.

Automatic Defrost:

- The Beverage Centre is built to automatically defrost and prevent any ice forming on the evaporator. The ‘Defrost cycle will automatically run for 20 minutes once every 80 minutes.

- Manual Defrost: Turn the unit OFF.

- Empty the cabinet of all stock, moving it to a suitable back-up chiller.

- The ice will start to melt. When finished, dry off any residual moisture with a soft cloth.

- Turn the unit ON: Please note: It will take around 12 hours for the cabinet to get down to temperature again.

- IMPORTANT: The Beverage Centre will go through its normal automatic defrosting cycle and a manual defrosting operation is only required in most extreme cases. It is better to avoid if not necessary.

- While in the 'Defrost' mode, the Beverage Centre cooling power is reduced. The automatic cycles ensure the defrosting is done in the most efficient manner, and only when required. It is not recommended to leave the Beverage Centre in the manually set defrost mode for prolonged periods of time.

- Loading the Beverage Centre: Always check that you can close the door without it hitting a bottle or can, before shutting it.

- When loading several bottles or cans at once, it will take longer for the appliance to cool the individual bottles or cans.

- IMPORTANT: Do not overload the cabinet, and only store drinks in sealed bottles or cans.

- Storing larger or different shaped bottles may affect its storage capacity. If storing larger bottles, make sure that they do not prevent the door from shutting properly. Before shutting the door, always check that you can close it without bottles falling down inside the cabinet.

- Note: The controller allows you to choose a desired operating temperature of between 0°C and 22°C.

- Most applications will only require the Beverage Centre to set up to 10°C.

- Cantina does not recommend to operate the Beverage Centre on settings of below 4°C for prolonged periods, as doing so could cause contents of the chiller to freeze. This could result in unnecessary strain on the cooling systems, and undue high energy consumption.

Operation Instructions

Control Panel

A. Power Button

B. Light Button

C. Digital Display

D. Temperature Scale

E. Plus / Increase Temperature

F. Minus / Decrease Temperature

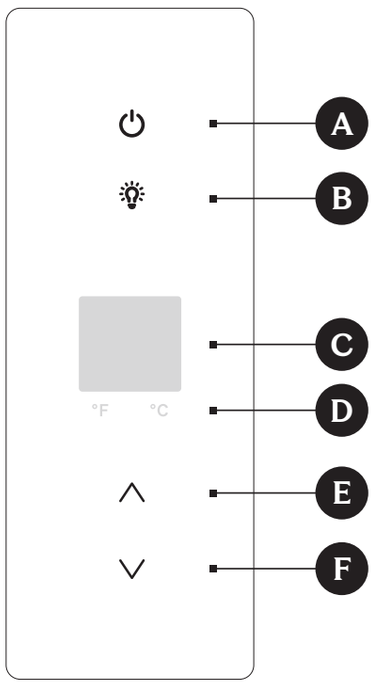

- **Power Button**
  Turns the appliance on or off.
- **Light Button**
  Turns the interior light on or off.
- **Digital Display**
  Displays the current temperature and settings.
- **D. Temperature Scale**
  Indicates the selected temperature range.
- **Plus / Increase Temperature**
  Increases the set temperature.
- **Minus / Decrease Temperature**
  Decreases the set temperature.

Before First Use

- Clean the compartment
  Before switching on the appliance and clean the interior.
- Let the appliance rest
  Place the appliance on a level, firm, and dry surface and allow it to stand for at least 3 hours before powering on
- Power on
  Switch on the appliance. It should begin cooling within one hour. If it does not, please check the power connection

Ambient Temperature

- It is recommended you install the wine cooler in a place where the ambient temperature is between 19°C-24°C (66°F-75°F), and humidity is under 60%. If the ambient temperature is above or below recommended temperatures, the performance of the unit may be affected. For example, placing your unit in extreme cold or hot conditions may cause interior temperatures to fluctuate.

Can Arrangement

- Prepare the Shelves: Ensure all shelves are correctly installed before placing cans inside.
- Set the Temperature: Adjust the appliance to the desired temperature and allow several hours for bottles to reach this temperature.
- The appliance is equipped with independent shelves, providing ample space to store and organise your beverage collection
- Actual storage capacity may vary depending on the size of the bottles or cans being stored and the arrangement of items within the appliance
- Each shelf can be partially extended for easy loading and unloading of beverages. Ensure the door is opened fully before pulling out any shelf
- If the beverage cabinet will not be used for an extended period, switch off the power, clean the interior thoroughly, and leave the door slightly open to allow ventilation and prevent odours from developing

Troubleshooting

For Minor Faults

Problem	Possible Cause	Possible Solution
The Beverage Centre does not operate	• The appliance is not plugged in • The appliance is turned off • The circuit breaker tripped or a blown fuse	• Plug in appliance • Turn on power point • Reset circuit breaker/replace fuse.
The Beverage Centre is not cold enough	• Check the temperature control setting • The door is opened too often, or is kept open for too long • The Beverage Centre has recently been disconnected for a period of time. The door is not closed completely	• Reduce the temperature • Do not open door for 4 hours • Check that the door is closed properly and for any obstructions preventing the door closing properly
The Beverage Centre turns on and off frequently	• The room temperature is hotter than normal • A large amount of contents has been added to the Beverage Centre • The door is opened too often • The door is not closed completely • The temperature control is not set correctly • The door gasket does not seal properly	• Increase air flow into room • Do not open door for 4 hours to allow Beverage Centre to cool to temperature • Check that the door is closed properly and for any obstructions preventing the door closing properly • Check temperature setting and decrease if required • Replace gasket.
Vibrations	• Beverage Centre is not level • Beverage Centre is touching the wall • If continued vibration occurs	• Level Beverage Centre • Ensure a 5cm gap from sides and top • Turn off the Beverage Centre, unplug the power plug and contact our after sales support centre for further assistance
The door will not close properly	• The Beverage Centre is not level • The gasket is dirty • The shelves are out of position.	• Level Beverage Centre • Clean gasket with warm water and a soft cloth • Re-position shelves correctly
Moisture forms on the inside walls	• The door is slightly open • The door is kept open too long, or is opened too frequently • The door does not seal properly	• Check that the door is closed properly and for any obstructions preventing the door closing properly • Do not open door for 4 hours to allow Beverage Centre to cool to temperature • Check if gasket is damage and replace if it is
Moisture forms on the outside of the appliance	• The door is slightly open, causing cold air from inside the Beverage Centre to meet warm, moist air from outside	• Check that the door is closed properly and for any obstructions preventing the door closing properly

Troubleshooting (Continued)

For Serious Faults

Some minor faults can be fixed by referring to the table above, however if an emergency or serious fault occurs, immediately set all controls to their off positions and disconnect the power from the source.

If a serious fault occurs, DO NOT attempt to repair the Outdoor Beverage Centre yourself, instead wait for a service agent to do so.

For assistance or to organise an authorised service agent contact our After Sales Support by calling 1300 11 4357, or by emailing support@residentiagroup.com.au.

Please note that if a service agent is asked to attend whilst the product is under warranty and finds that the problem is not the result of an appliance fault, then you may be liable for the cost of the call out charge.

The appliance must be accessible for the service agent to perform any necessary repair. If your appliance is installed in such a way that a service agent is concerned that damage will be caused to the appliance or your kitchen, then they will not complete a repair.

Please refer to the Warranty Information to learn more.

Cleaning & Maintenance

Cleaning

- Always disconnect the appliance before cleaning.
- Use a soft cloth or sponge with clean water to gently wipe the appliance.
- Do not use organic solvents, alkaline cleaners, boiling water, washing powder, or acidic liquids.
- Do not rinse or flush the interior with water.
- Regularly clean any surfaces connected to the drainage system.

Power Outage

- Most power interruptions are short. To protect your beverages, avoid opening the door during a power outage.
- For extended outages, take appropriate steps to safeguard your collection.
- If the appliance has been disconnected or restarted after a power cut, wait at least 5 minutes before powering it back on

Long-Term Shutdown

If the appliance will not be used for an extended period:

- Remove all bottles
- Switch the appliance off
- Defrost and clean thoroughly
- Dry the interior
- Leave the door slightly open to prevent mould and odours

Moving the Appliance

- Disconnect power and unplug the unit.
- Remove all bottles before transport.
- When moving, keep the appliance upright and avoid tilting it more than 45°.

Technical Specifications

Product Specifications

Model	**CBF190B**
Capacity (Litres)	190L
Installation	Built-in or Freestanding
Dimensions (W × D × H mm)	865 × 496 × 846
Rated Voltage / Frequency	AC 220V/50Hz
Climate Class	T
Rated Current	2A
Refrigerant	R600a/54g
Temperature Range:	0-22°C

The Net weight includes shelves and the Unit dimension is without handle on the door.

The manufacturer reserves all the rights to change the above parameters without prior notice. Please refer to the name plate of your appliance.

Loading capacity will vary in terms of different way of bottle arrangement or different bottle sizes.

Purchase Details

Attach your receipt to this page

For future reference, please record the following information which can be found on the rating plate and the date of purchase which can be found on your sales invoice.

Store Details

Store Name

Address

Telephone | Purchase Date

Product Details

Model No.

Serial No.

Notes

Notes

Warranty Information

WARRANTY TERMS AND CONDITIONS
OUTDOOR BEVERAGE CENTRES

This document sets out the terms and conditions of the product warranties for Residentia Group Appliances. It is an important document. Please keep it with your proof of purchase documents in a safe place for future reference should you require service for your Appliance.

1. In this warranty
(a) 'acceptable quality' as referred to in clause 10 of this warranty has the same meaning referred to in the ACL;
(b) 'ACL' means Trade Practices Amendment (Australian Consumer Law) Act (No.2) 2010;
(c) 'Appliance' means any Residentia Group product purchased by you accompanied by this document;
(d) 'ASR' means Residentia Group authorised service representative;
(e) 'Residentia Group' means Residentia Group Pty Ltd of 165 Barkly Ave, Burnley VIC 3121, ACN 70 600 546 656 in respect of Appliances purchased in Australia;
(f) 'major failure' as referred to in clause 10 of this warranty has the same meaning referred to in the ACL and includes a situation when an Appliance cannot be repaired or it is uneconomic for Residentia Group, at its discretion, to repair an Appliance during the Warranty Period;
(g) 'Warranty Period' means:
    (i) where the Appliance is used for personal, domestic or household use (i.e. normal single family use) as set out in the instruction manual, the Appliance is warranted against manufacturing defects for 24 months, following the date of original purchase of the Appliance;
(h) 'you' means the purchaser of the Appliance not having purchased the Appliance for re-sale, and 'your' has a corresponding meaning.

2. This warranty only applies to Appliances purchased and used in Australia and is in addition to (and does not exclude, restrict, or modify in any way) any non-excludable statutory warranties in Australia.

3. During the Warranty Period Residentia Group or its ASR will, at no extra charge if your Appliance is readily accessible for service, without special equipment and subject to these terms and conditions, repair or replace any parts which it considers to be defective. Residentia Group or its ASR may use remanufactured parts to repair your Appliance. You agree that any replaced Appliances or parts become the property of Residentia Group. This warranty does not apply to light globes, batteries, seals, filters or similar perishable parts.

4. Parts and Appliances not supplied by Residentia Group are not covered by this warranty.

5. You will bear the cost of transportation, travel and delivery of the Appliance to and from Residentia Group or its ASR. If you reside outside of the service area, you will bear the cost of:
(a) travel of an authorised representative;
(b) transportation and delivery of the Appliance to and from Residentia Group or its ASR, in all instances, unless the Appliance is transported by Residentia Group or its ASR, the Appliance is transported at the owner's cost and risk while in transit to and from Residentia Group or its ASR.

6. Proof of purchase is required before you can make a claim under this warranty.

7. You may not make a claim under this warranty unless the defect claimed is due to faulty or defective parts or workmanship. Residentia Group is not liable in the following situations (which are not exhaustive):
(a) the Appliance is damaged by:
    (i) accident
    (ii) misuse or abuse, including failure to properly maintain or service
    (iii) normal wear and tear
    (iv) power surges, electrical storm damage or incorrect power supply
    (v) incomplete or improper installation
    (vi) incorrect, improper or inappropriate operation
    (vii) insect or vermin infestation
    (viii) failure to comply with any additional instructions supplied with the Appliance;
(b) the Appliance is modified without authority from Residentia Group in writing;
(c) the Appliance's serial number or warranty seal has been removed or defaced;
(d) the Appliance was serviced or repaired by anyone other than Residentia Group, an authorised repairer or ASR.

8. This warranty, the contract to which it relates and the relationship between you and Residentia Group are governed by the law applicable where the Appliance was purchased.

9. To the extent permitted by law, Residentia Group excludes all warranties and liabilities (other than as contained in this document) including liability for any loss or damage whether direct or indirect arising from your purchase, use or non use of the Appliance.

10. For Appliances and services provided by Residentia Group in Australia, the Appliances come with a guarantee by Residentia Group that cannot be excluded under the Australian Consumer Law. You are entitled to a replacement or refund for a major failure and for compensation for any other reasonably foreseeable loss or damage. You are also entitled to have the Appliance repaired or replaced if the Appliance fails to be of acceptable quality and the failure does not amount to a major failure. The benefits to you given by this warranty are in addition to your other rights and remedies under a law in relation to the Appliances or services to which the warranty relates.

11. At all times during the Warranty Period, Residentia Group shall, at its discretion, determine whether repair, replacement or refund will apply if an Appliance has a valid warranty claim applicable to it.

12. Missing parts are not covered by warranty. Residentia Group reserves the right to assess each request for missing parts in a case by case basis. Any parts that are not reported missing in the first week after purchase will not provide free of charge.

13. To enquire about claiming under this warranty, please follow these steps:
(a) carefully check the operating instructions, user manual and the terms of this warranty;
(b) have the model and serial number of the Appliance available;
(c) have the proof of purchase (e.g. an invoice) available;
(d) telephone the numbers shown below.

14. You accept that if you make a warranty claim, Residentia Group and its ASR may exchange information in relation to you, in order to enable Residentia Group to meet its obligations under this warranty.

IMPORTANT
Before calling for service, please ensure that the steps in point 13 have been followed.

Contact Service: Please call 1300 11 HELP (4357)

The Australian Consumer Law requires the inclusion of the following statement with this warranty:

Our goods come with guarantees that cannot be excluded under the Australian Consumer Law. You are entitled to a replacement or refund for a major failure and for compensation for any other reasonably foreseeable loss or damage. You are also entitled to have the goods repaired or replaced if the goods fail to be of acceptable quality and the failure does not amount to a major failure.

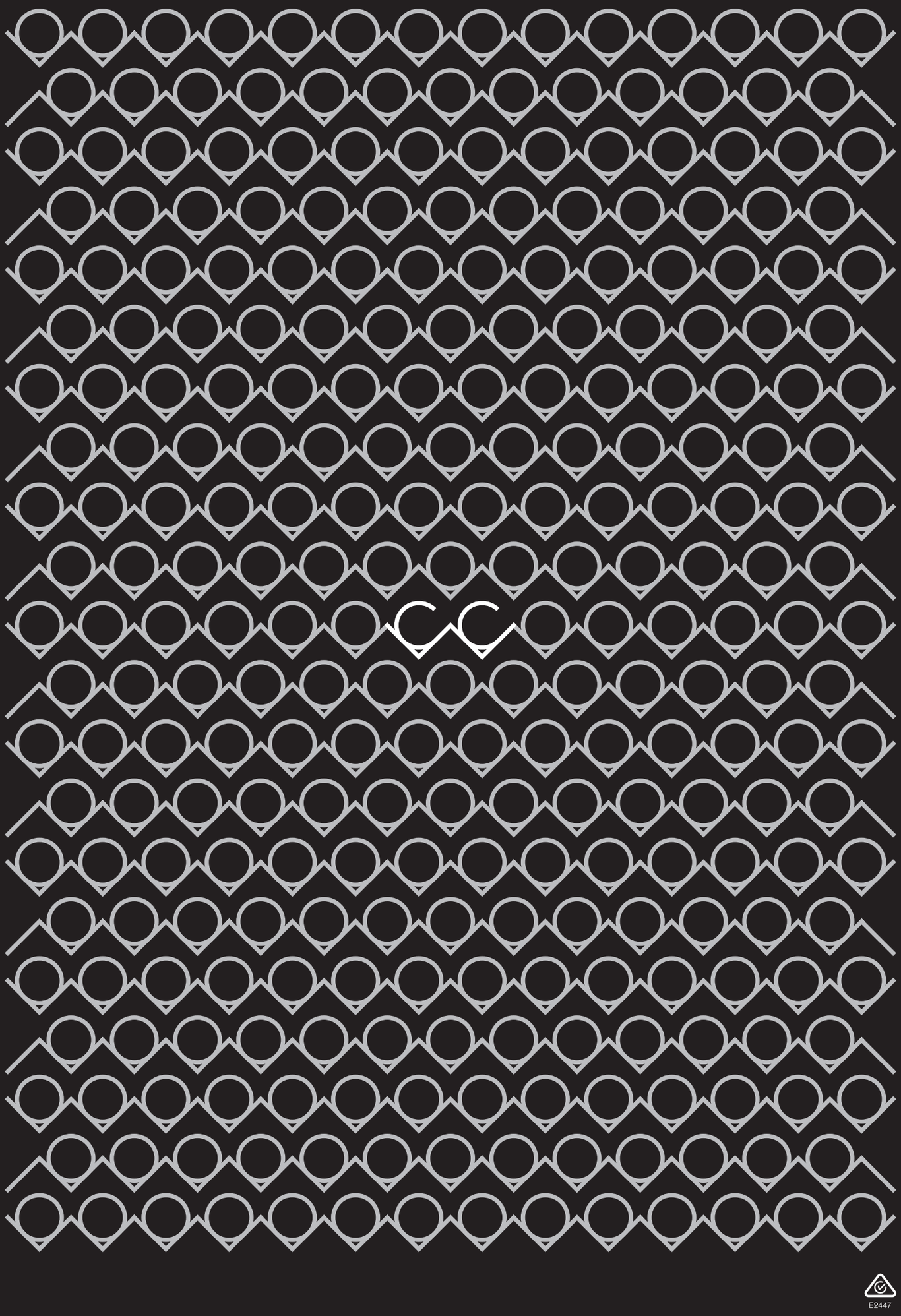
E2447