90cm 9 Function Oven with Hydroclean®

HLF 940

Features
91L gross oven capacity
9 functions including
Fingerprint proof stainless steel
Hydroclean® Pro cleaning system
Touch control programmable clock timer
Stainless steel w. black cover knobs
Interior light & cooling fan
Chromed supports w. 1+1 full extension telescopic guides
Triple glazed glass door
Easy to remove door system
Drop down grill/maxi grill
A+ European energy class
Child safety lock
Deep tray, baking tray & reinforced cooking grid
5 cooking levels

9 × Cooking Functions
› Fan-Forced
› Fan-Forced + Bottom Heat
› Fan Bake
› Bake
› Bottom Heat (Pastry)
› Grill
› Maxi Grill
› Maxi Grill + Fan
› Grill + Bottom (Roast)
› Defrost

Safety
Triple glazed cool touch door
Child safe lock
Safety thermostat
Telescopic guides for ease of use

Product Dimensions
Physical (w, d, h mm)
› 890 × 560 × 480

Warranty
5 years (3+2 on registration)

Cleaning
Teka Hydroclean© cleaning system
Easy to remove inner door glass
Crystal clean enamel to oven interior
Fingerprint proof stainless steel

Requirements
Rated Power: 220–240V
Maximum Power: 3553W
Installation: Hard-wired
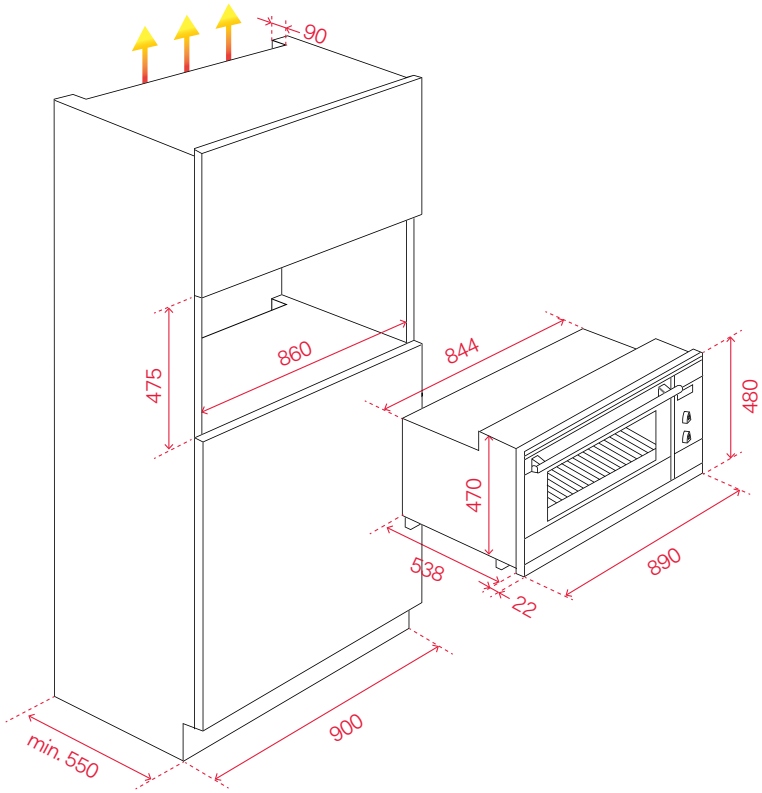
Below: Installation